INSTALLATION GUIDE

TorqDrive for Cable Actuated
Harley-Davidson 500/750

Doc ID: 191-2807B
Revision: 012022

©2022 Rekluse Motor Sports
Rekluse Motor Sports, Inc.
customerservice@rekluse.com

Table of Contents

OVERVIEW 3
INSTALLATION TIPS 3
TOOLS 4
BEFORE YOU BEGIN 4
INCLUDED PARTS 4
PREPARE BIKE FOR INSTALLATION 5
DISASSEMBLE THE CLUTCH 5
INSPECT THE BASKET 10
INSTALL THE BASKET SLEEVES 11
INSTALL THE CLUTCH PACK 12
Notes for Clutch Pack Installation: 12
Clutch Pack 13
CLUTCH COVER INSTALLATION 17
SET CLUTCH LEVER FREE PLAY 18
BREAK IN THE NEW CLUTCH 18
MAINTENANCE 19
Disk inspection examples 20
TROUBLESHOOTING 21
Performance issues 21
Clutch Drag 21
Clutch Slip 21
NEED ADDITIONAL HELP? 21

OVERVIEW

This kit replaces many of the OE (Original Equipment) or “stock” clutch parts. These parts are designed specifically for your motorcycle to ensure optimal performance. The following is a summary of what is replaced:

- OE friction disks
- OE drive plates
- OE pressure plate springs

INSTALLATION TIPS

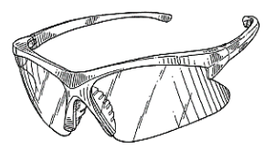

- Read the separate included Safety Information document before operating the vehicle with the product installed.
- Installation requires the removal of the right foot control assembly and some of the exhaust system to access the clutch cover. Consult the OE service manual for these instructions.
- Read this entire document before performing any steps.
- If you install this product for a customer or another person, instruct them to read the **Safety Information** document and the **Installation and User Guide** before operating the bike with the product.
- Protect eyes and skin – wear safety glasses and work gloves.
- Use the torque values listed in the instructions. Otherwise, use the torque specifications found in your OE service manual.
- Different spring options may be available purchased from Rekluse (depending on the bike model) for:
  - Motorcycles with taller gearing or modified engines with increased horsepower
  - Customers looking for a lighter lever pull
- Inspect your OE cable for fraying and replace if needed.

- For optimal clutch performance, Rekluse recommends using fresh, clean oil that **meets JASO-MA** oil rating requirements. Rekluse offers Factory Formulated Oil™ developed specifically for Rekluse products. Rekluse Factory Formulated Oil is a perfect complement to any OEM or aftermarket wet clutch. Visit www.rekluse.com to learn more.

TOOLS

- 1 3/16” Socket
- 9/16” Socket
- ½” Socket
- 5/16” Socket
- 3/16” Socket
- 10 mm Socket
- 9/16” Wrench
- Torque Wrench
- Pick
- Channel-lock Pliers
- Socket Wrench

BEFORE YOU BEGIN

- Rekluse recommends replacing the chaincase cover gasket when installing this product.

⚠CAUTION

Be aware that installing the clutch requires the removal of the right foot control assembly and some of the exhaust system to access the clutch cover. Consult the OE service manual for these instructions.

INCLUDED PARTS

Refer to the included **Parts Fiche** for a detail of the components.

Visit www.rekluse.com/support for a full parts fiche illustration and part numbers.

PREPARE BIKE FOR INSTALLATION

1. Stand the bike up on a suitable bike stand.
2. On the underside of the bike, use a ½” socket to remove the engine oil drain plug, then drain the oil into a suitable container.

DISASSEMBLE THE CLUTCH

1. Unhook the brake lamp switch connector wires by gently pulling the connectors to release them, then move them out of the way of the exhaust system.

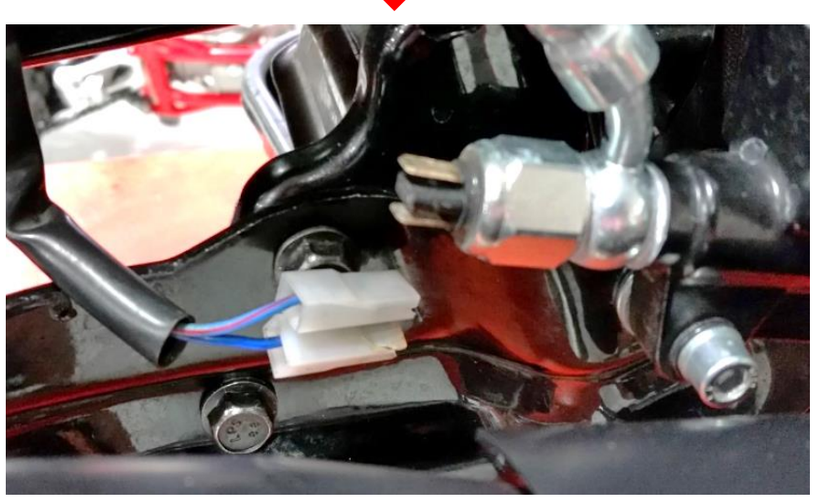

2. Remove the right foot control assembly according to the OE service manual.
3. Remove the exhaust assembly according to the OE service manual.
4. Using channel-lock pliers, unhook the clutch cable from the actuator arm.

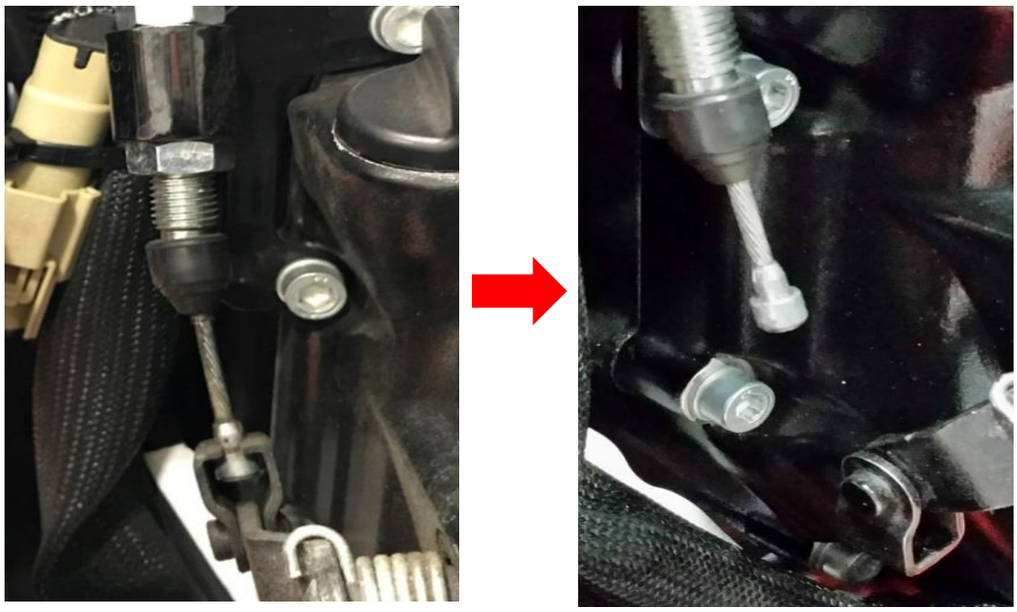

5. Move the wire harness aside to access the clutch cover bolts.
6. Loosen or remove the oil cap from the clutch cover.

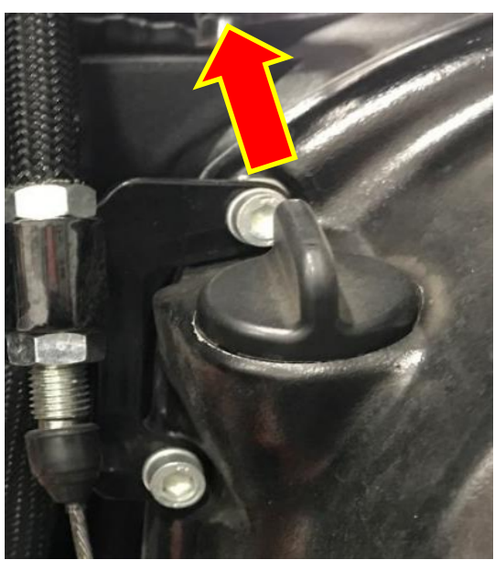

7. Use a 3/16” Hex head socket to remove the clutch cover bolts.

8. Remove the pressure plate bolts and lifter plate, then remove the springs.

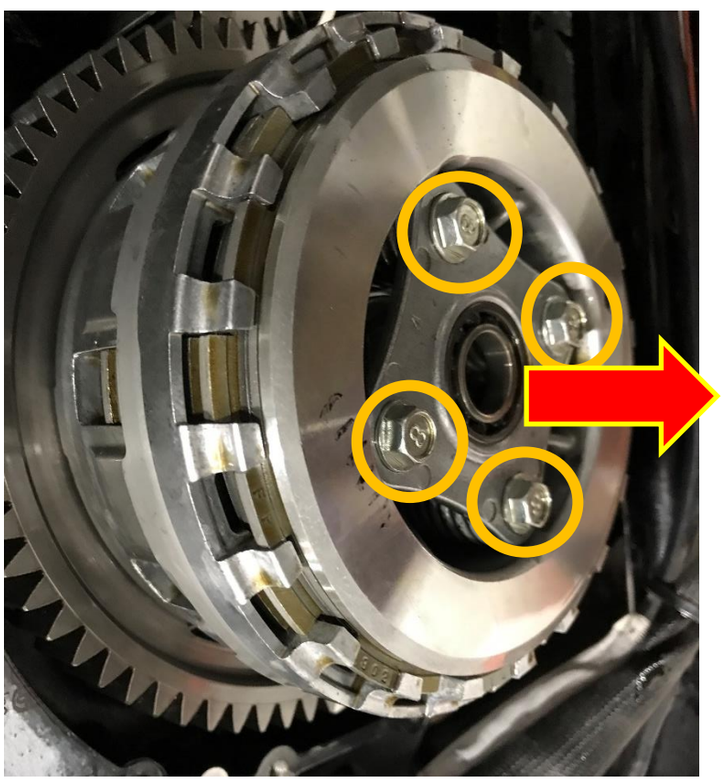

9. Use 1 3/16” socket to remove the clutch assembly nut, remove the cupped washer, then remove the inner hub.

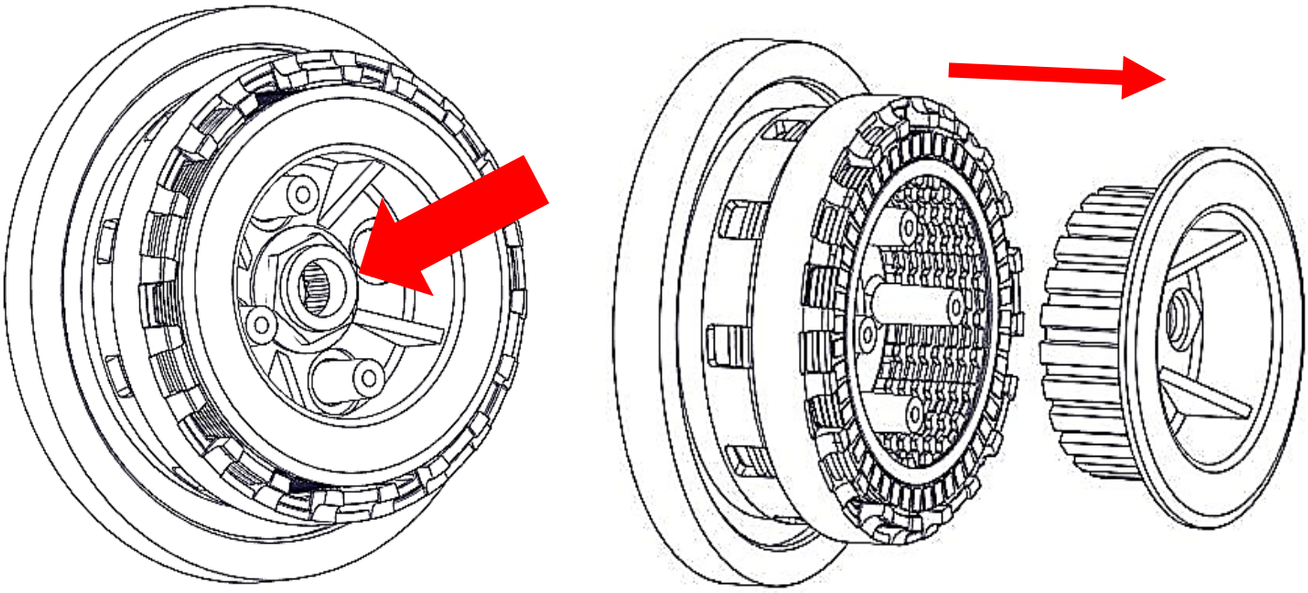

Note: *Set the cupped washer and nut aside. It will be reused.*

10. Remove the damper spring seat and the damper spring, then remove the OE clutch pack. *Set the damper spring seat and damper spring aside. They will be reused.*

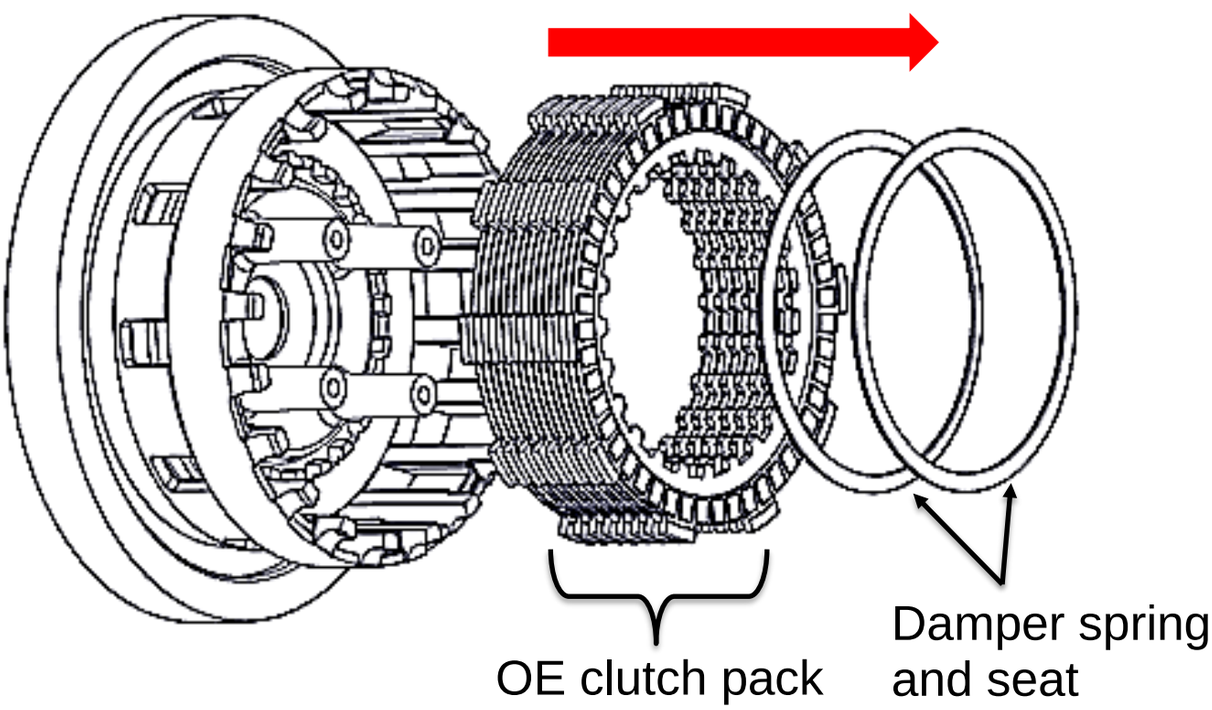

Note: *It may be necessary to use picks to reach and remove the bottom of the clutch pack.*

11. Remove the pressure plate.

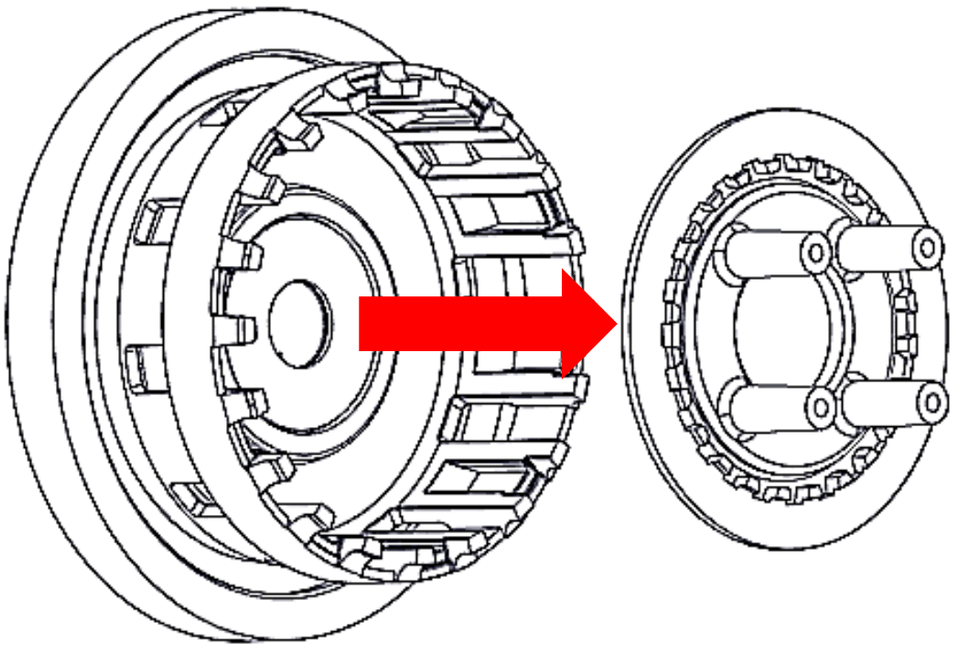

12. Remove the flat washer and the clutch basket from the main shaft.

INSPECT THE BASKET

⚠WARNING

Failure to inspect the basket and replace it if necessary could result in death, serious injury, and/or property damage.

Inspect the clutch basket for notching. Do not install sleeves or use products with a notched basket. Notched basket tang faces can cause the sleeves to break. Do not use baskets that have been filed, machined, or modified on the tangs. Replace basket if necessary.

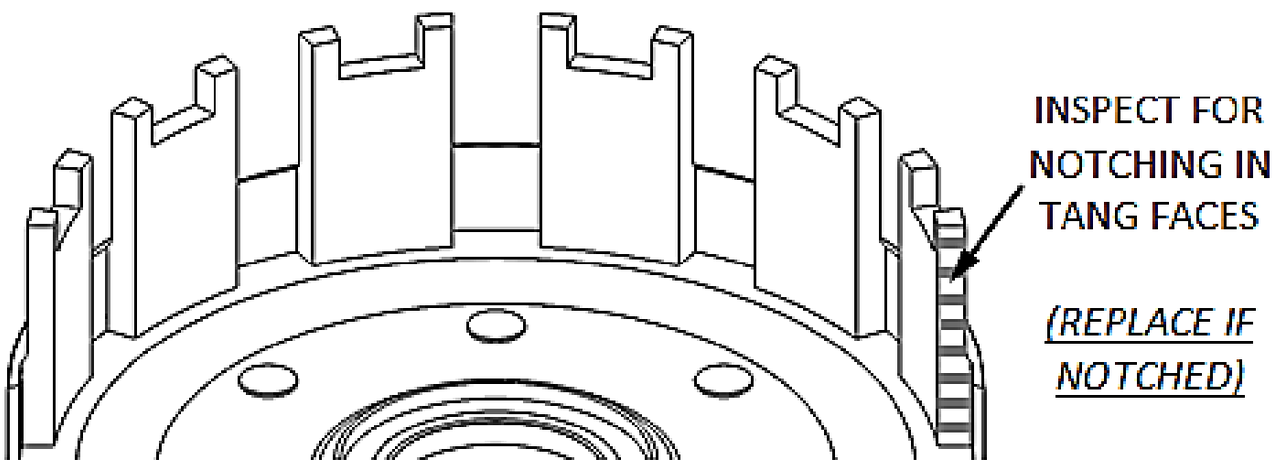

INSTALL THE BASKET SLEEVES

Install **ALL** the Rekluse basket sleeves into the OE basket slots. Make sure the sleeve tabs sit against the inside of the basket, then push the sleeves down until they contact the bottom of the tang slot. See pictures for reference.

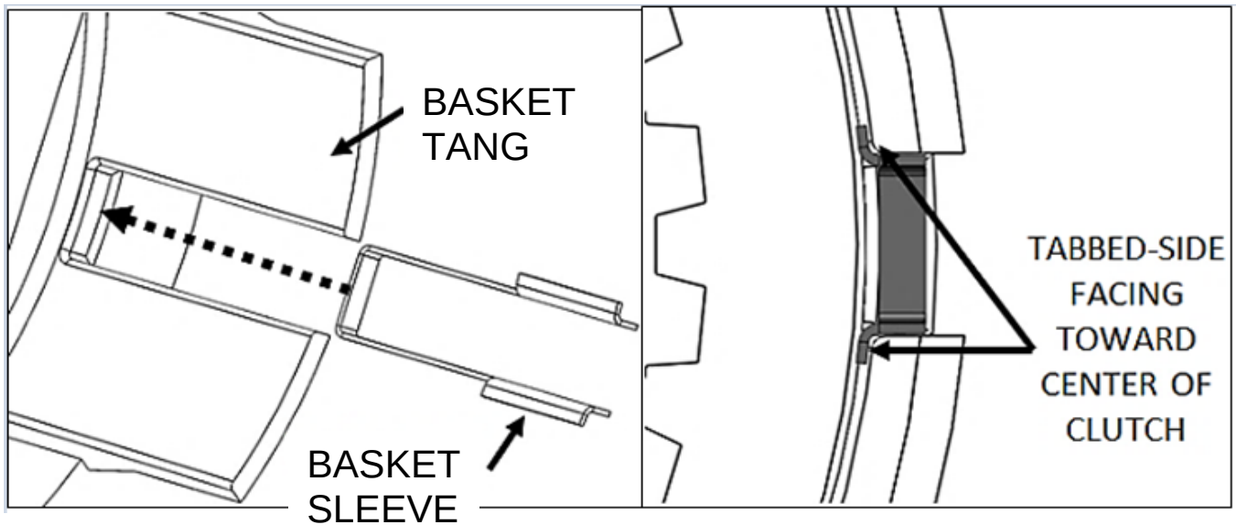

⚠WARNING

Rekluse basket sleeves are designed to be installed into an OE or Rekluse clutch basket ONLY. The use of non-Rekluse aftermarket clutch baskets may cause clutch damage or failure.

Note: *In some models, the sleeves will stick slightly above the top of the basket. This is normal.*

INSTALL THE CLUTCH PACK

Notes for Clutch Pack Installation:

- *The clutch pack is assembled onto the hub outside the bike, and then the whole assembly is placed into the bike.*
- *Some friction disks are marked with a small colored dot. This mark is used for processing and can be ignored.*
- When assembling the clutch pack, it is important to line up the alignment notches on the friction disk tabs. *Correct alignment is critical for optimal performance.*

Align notches of friction disks

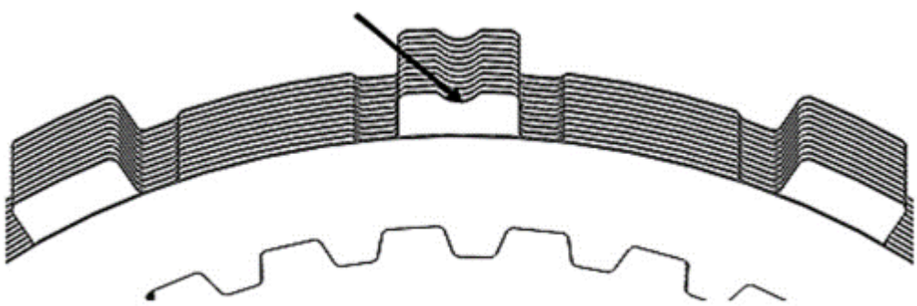

- *Some OE baskets have "half slots" at the top of the basket tangs. Rekluse products require the entire clutch pack to be installed into the MAIN (deeper) basket slots. Do not use the "half slots." Installing the pack in the "half slots" will cause performance issues.*

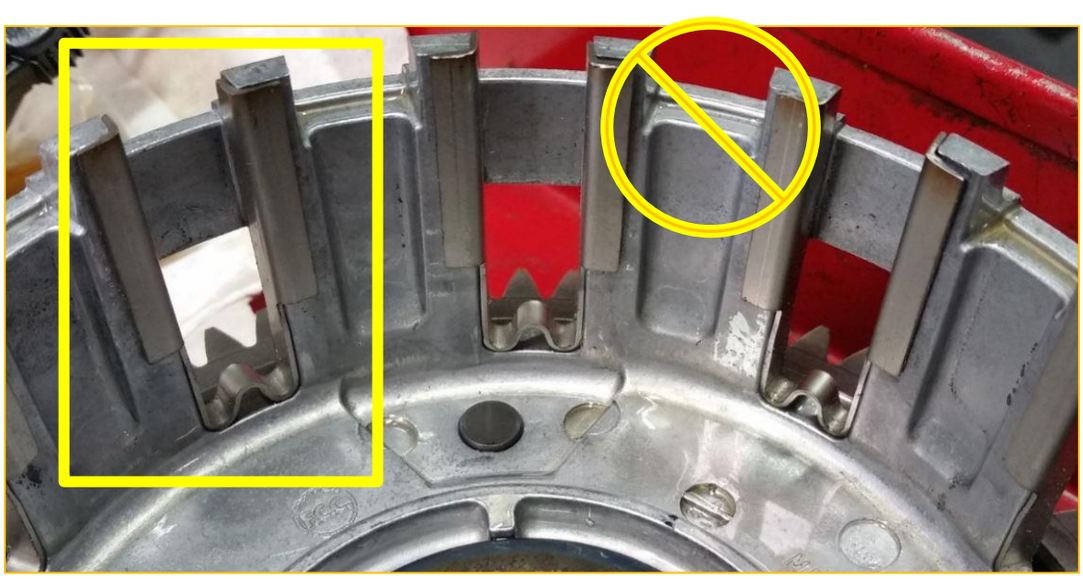

Clutch Pack

1. Soak the friction disks in new engine oil for 5 minutes. Make sure the disks are coated in oil on both sides.

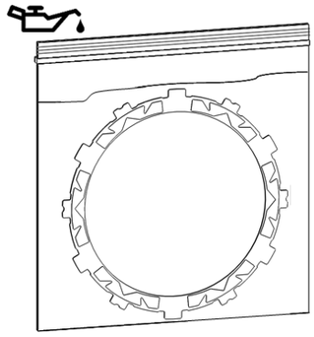

2. Turn the inner hub upside down on a workbench.

Install the frictions and drive plates onto the hub one at a time according to the **Setup Sheet:**

1. Install the thick friction disk first
2. Install the damper spring seat, then add the damper spring, cupped side down.
3. Install the remaining frictions and drive plates according to the **Setup Sheet**
4. Install the pressure plate onto the inner hub.

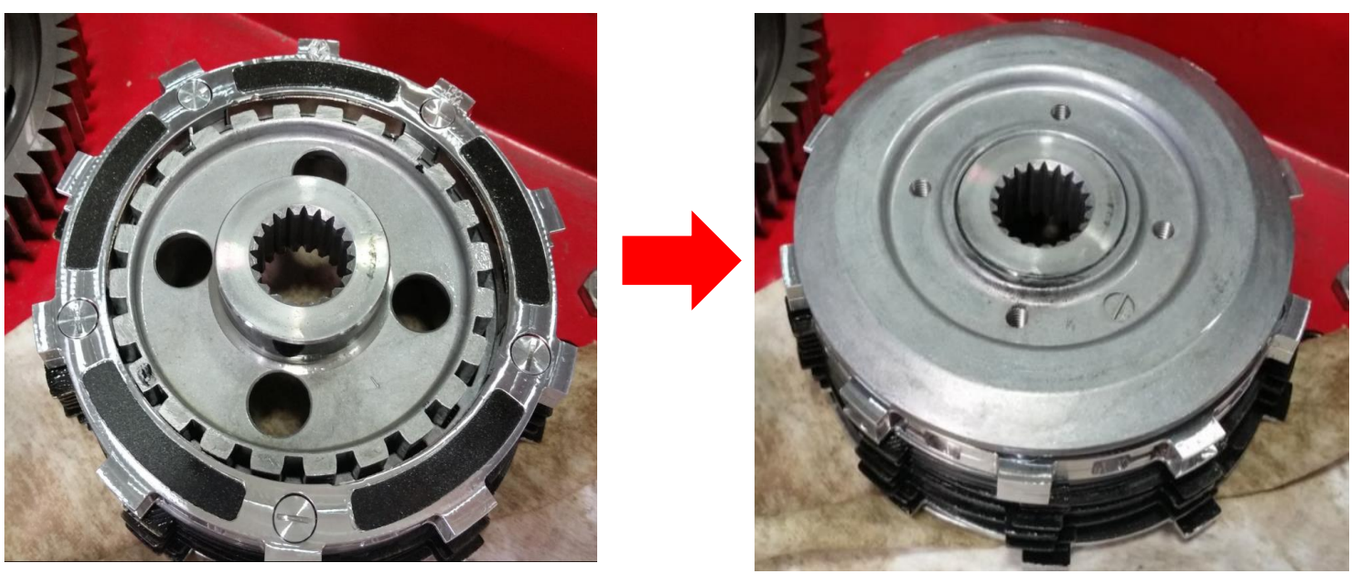

5. Flip the assembled inner hub over on the workbench.

6. Install 2 new Rekluse pressure plate springs, then install the lifter plate with 2 OE pressure plate bolts. *All 4 bolts are installed in Step 20.*

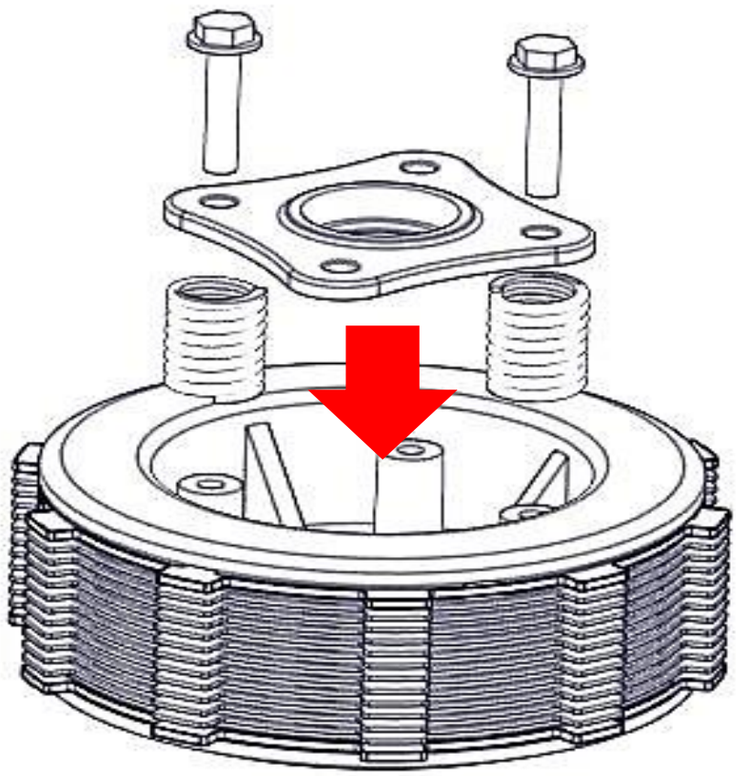

7. Reinstall the flat thrust washer into the clutch basket.

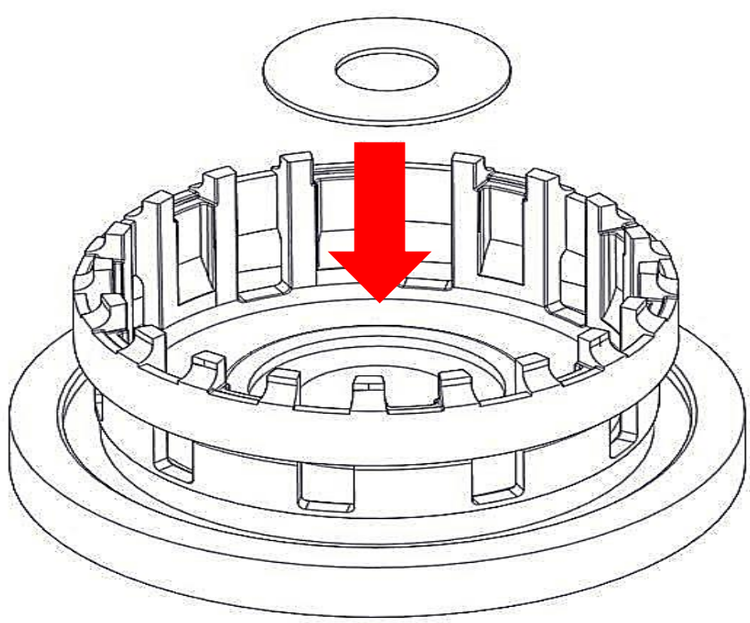

8. Insert the inner hub assembly into the clutch basket with the pressure plate toward the bottom of the basket.

Note: *Make sure the alignment notches on all the friction disks are lined up and installed into the slots with the basket sleeves.*

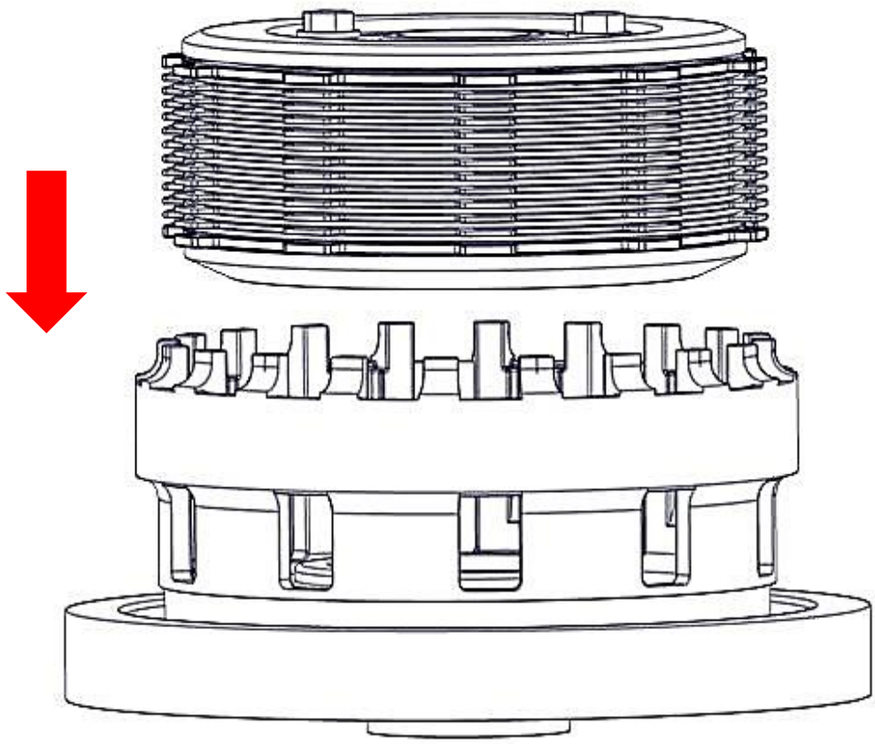

9. Install the assembled clutch basket onto the main shaft in the bike, being sure to line up the ring gear with the crankshaft gear before seating the basket.

10. Once installed on the bike, remove the 2 pressure plate bolts, the lifter plate, and the 2 springs.

11. Reinstall the cupped washer (cupped side toward the bike) on the main shaft, then reinstall the clutch assembly nut.

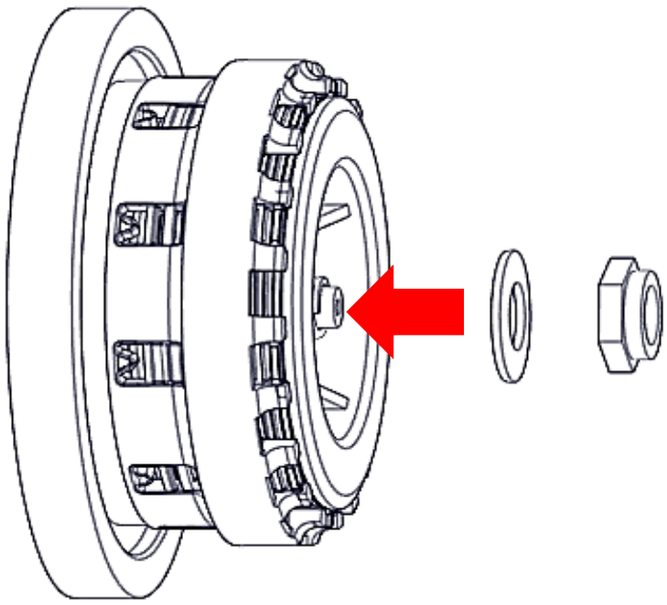

12. Torque the clutch assembly nut to **130-136 ft-lbs (175-185 N-m)** per OE specifications.

13. Install the 4 Rekluse pressure plate springs, the lifter plate, and the 4 OE pressure plate bolts.

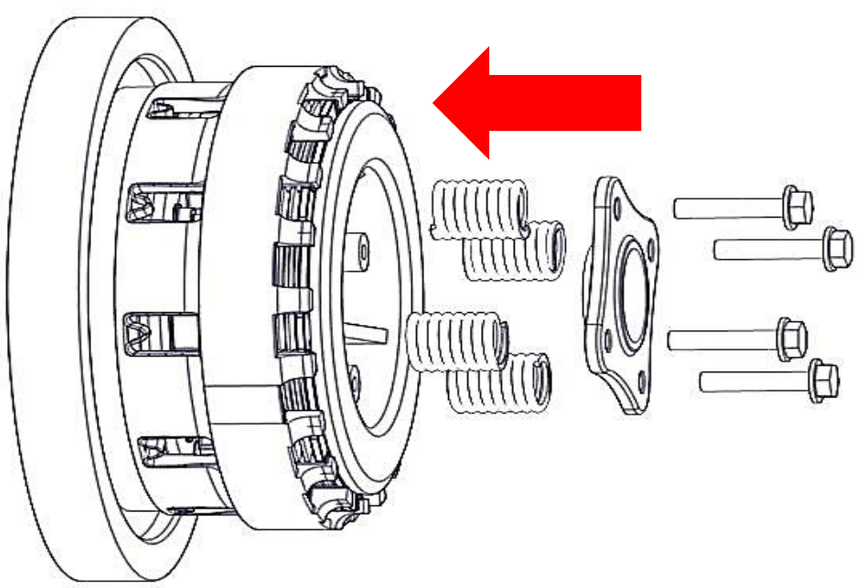

14. Torque the pressure plate bolts to **71-106 in-lbs (8-12 N-m)** per OE specifications.

CLUTCH COVER INSTALLATION

1. Reinstall the OE clutch cover gasket, then reinstall the clutch cover.
2. Reinstall the clutch cover bolts and torque to 89-106 in-lbs (10-12 N-m) per OE specifications.
3. Tighten or reinstall the clutch cover oil plug.
4. Reinstall the clutch cable to the actuator arm.

5. Reinstall the exhaust assembly according to the OE service manual.
6. Reinstall the brake pedal assembly according to the OE service manual.
7. Reattach the brake lamp switch connector wires.
8. Replace the oil plug, then fill it with oil according to the OE service manual.

9. Torque the engine oil drain plug to 15-18 ft-lb (20-25 N-m) per OE specifications.

SET CLUTCH LEVER FREE PLAY

“Lever Free Play” is essentially the “slack” in the clutch cable before it starts actuating the clutch. Applying a light finger pressure will take up this slack.

- Adjust the lever free play using the threaded cable tension adjuster or with the perch adjuster.
- Adjust the free play until the cable slack is between 1/16” and 1/8” at the lever perch.

BREAK IN THE NEW CLUTCH

The clutch will break in within 100-200 miles of normal riding. Until break-in is complete, you may experience more clutch drag than normal.

- It is recommended to do an oil change after the first 1,000 miles to drain any excess clutch debris that occurred from the break-in.

MAINTENANCE

To keep your clutch performing at its best, perform regular maintenance on your bike and clutch.

- Keep up with regular oil changes according to the bike manufacturer’s recommendations. Clutch performance and longevity depend on oil quality.
- Use oil recommended by the manufacturer of your bike.
- For optimal clutch performance, Rekluse recommends using fresh, clean oil that **meets JASO-MA** oil rating requirements.
- Inspect all of your clutch parts for signs of wear or excessive heat, and replace components as necessary. This includes your basket sleeves. Clutch wear is dependent on the rider's use.
- Measuring the friction disks for wear. This can help determine if the components need replacing.
- Repeat the break-in procedure anytime you replace the frictions disks. Always soak friction disks in oil for at least 5 minutes before installing.
- Replace friction disks if they measure below specifications or if the disks are glazed and/or burnt.
- Replace the drive plates if they show signs of excessive heat.

Disk inspection examples

When inspecting the clutch pack, the following pictures can be used as a reference. **These are best viewed in color by viewing this install document on www.rekluse.com/support.**

Drive Plates – If the clutch pack is getting high amounts of heat, purple, blue, or black color can be seen on the drive plate teeth. See pictures below. Not all drive plates look the same and may look different than pictured.

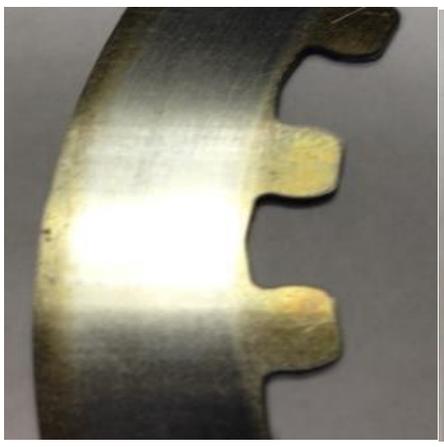

Normal Heat

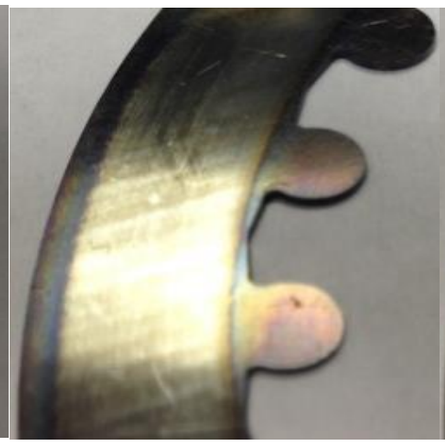

High Heat (Blue)

Excessive Heat (Black)

Friction Disks – Due to the dark color of the friction material, the friction disks will appear almost black as soon as they are put in oil. During the inspection, look for glazing of the friction material. Glazing will appear shiny and feel like glass, even after the oil is cleaned from the friction disk. Not all friction disks look the same and may look different than pictured.

Normal Friction

Glazed Friction

TROUBLESHOOTING

Performance issues

If you find yourself constantly adjusting free play or adjusting for drag, the clutch disks might be worn. Excessive heat or clutch slip can cause premature clutch failure as well. Once extreme temperatures are reached, irreversible damage will occur.

- Inspect all of your clutch parts for signs of wear or excessive heat, and replace components as necessary. Clutch wear is dependent on the rider's use.

- Measuring the clutch pack can help determine if the components need replacing.

Clutch Drag:

If drag occurs only while the bike is cold, oil is the most likely cause. Be sure to warm up the bike before riding and/or racing. The use of lighter-weight oil can help to minimize cold drag.

Clutch Slip:

If clutch slip occurs, inspect the clutch for signs of wear or heat.

NEED ADDITIONAL HELP?

Website

www.rekluse.com/support

Phone

(208) 426-0659

Monday thru Friday: 8 am – 5 pm Mountian Time

Email

tech@rekluse.com

SETUP SHEET 198-2815007

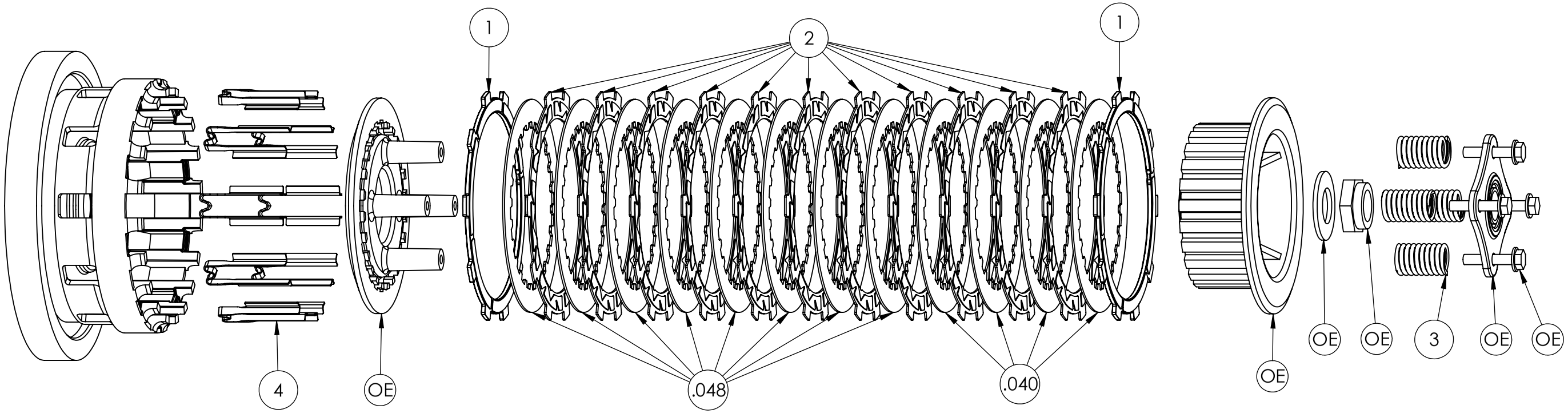

SERVICE LIMITS

COMPONENT	STANDARD	SERVICE LIMIT
TORQDRIVE FRICTION	.068-.072in 1.73-1.83mm	.065in 1.65mm
THICK FRICTION	.116-.120in 2.95-3.05mm	.113in 2.87mm

CLUTCH PACK THICKNESS

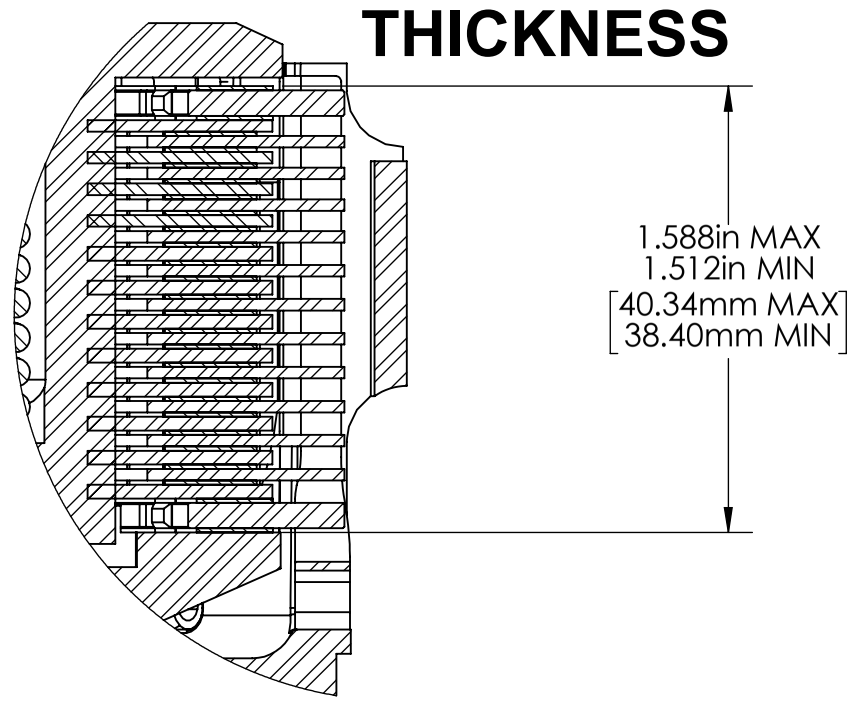

COMPONENTS

ITEM NO.	DESCRIPTION	QTY.
.040	DRIVE PLATE .040"	4
.048	DRIVE PLATE .048"	8
1	THICK FRICTION	2
2	TORQ DRIVE FRICTION	11
3	CLUTCH SPRING	4
4	BASKET SLEEVE	10

REKLUSE MotorSports
12000 FRANKLIN RD
BOISE, IDAHO 83709
WWW.REKLUSE.COM
PH (208) 426-0659
FAX (208) 672-1318