REKLUSE MOTOR SPORTS

The z-Start Pro Clutch

INSTALLATION GUIDE

Clutch Cable Actuated Models

Doc ID: 191-800
Revision: 040519

©2012 Rekluse Motor Sports
Rekluse Motor Sports, Inc.
208-426-0659
customerservice@rekluse.com

TABLE OF CONTENTS

z-START PRO CROSS-SECTION VIEW	3
INCLUDED PARTS	3
REQUIRED TOOLS	3
BIKE PREPARATION AND DISASSEMBLY	4
CLUTCH BASKET INSPECTION	5
INSTALLING THE z-START PRO CENTER CLUTCH	6
INSTALLING THE CLUTCH PACK	7
INSTALLING THE Z-START PRO CLUTCH	9
DETERMINE THE INSTALLED GAP OF THE Z-START PRO CLUTCH	12
SETTING CLUTCH CABLE SLACK	14
APPENDIX A – CENTER CLUTCH REMOVAL TIP SHEET	15

Oil: For optimal clutch performance Rekluse recommends using fresh, clean oil that **meets JASO-MA** oil rating requirements. Rekluse offers Factory Formulated Oil™ developed specifically for Rekluse products. Rekluse Factory Formulated Oil is a perfect complement to any OEM or aftermarket wet clutch. Visit www.rekluse.com to learn more.

Z-START PRO CROSS-SECTION VIEW

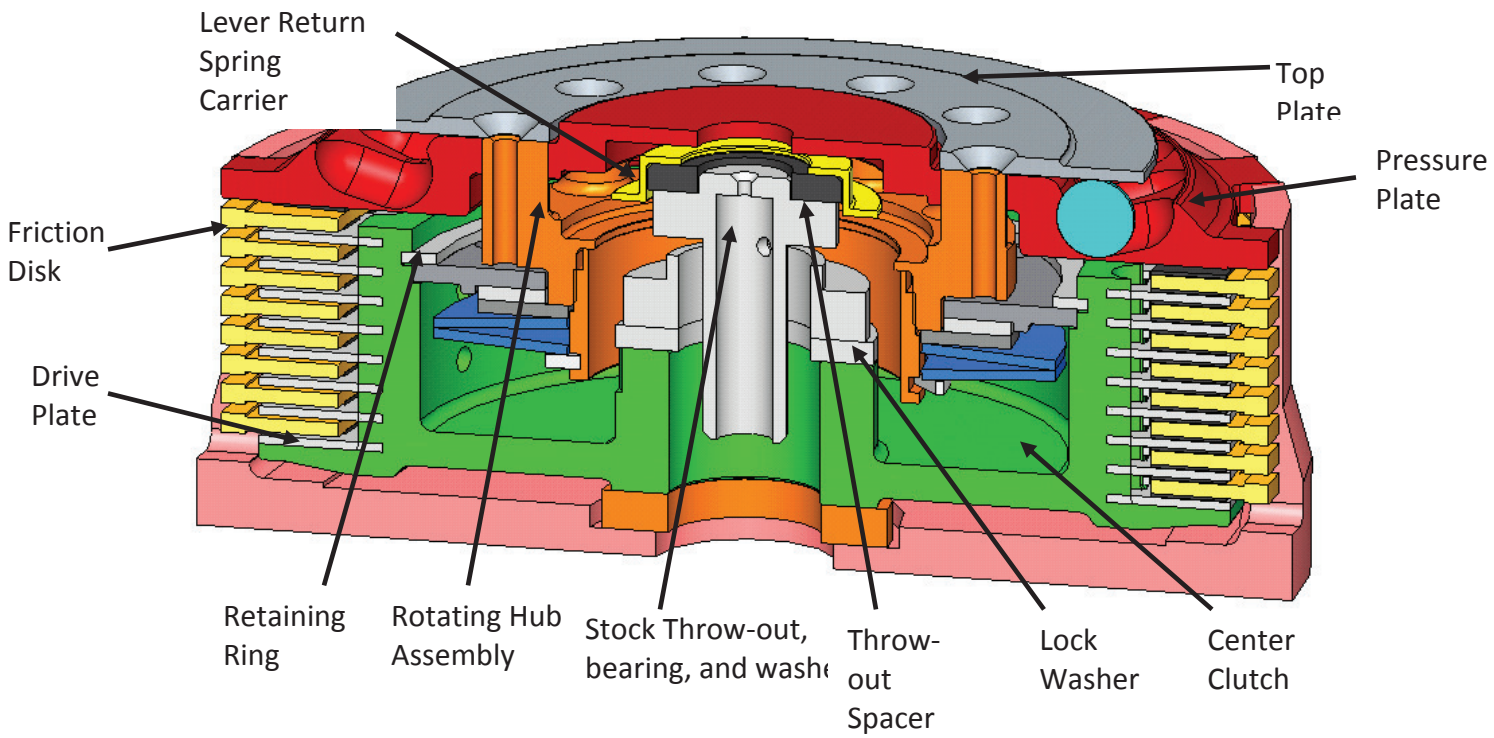

INCLUDED PARTS

Item

- ☐ Top Plate
- ☐ Pressure Plate
- ☐ Rekluse Center Clutch
- ☐ Retaining Ring
- ☐ (8) RMS Measured Drive Plates
- ☐ (1) RMS .065” **OR** .060” Drive Plate (Adjustment Plate)
- ☐ Rotating Hub Assembly
- ☐ External Tab Lock Washer
- ☐ Lever Return Spring Carrier
- ☐ Rekluse Throw-out Spacer
- ☐ Rekluse Oil Spigot (CRF250R Only)

Item

- ☐ (27) 7/16” Chrome Steel Ball Bearings (big bore bikes)
- ☐ (30) 3/8” Chrome Steel Ball Bearings (small bore bikes)
- ☐ (10) M4x12 Torx Head Screws
- ☐ Wave Springs – See Included Tuning Chart for your Model
- ☐ T-20 Torx Bit
- ☐ Blue Loctite 243
- ☐ Rekluse Clutch Cover Gasket
- ☐ Rekluse Wire Gauges

REQUIRED TOOLS

- 8mm socket
- 10mm socket
- 27mm or 30mm socket (for center clutch nut)
- T-20 Torx bit (supplied)
- Impact Wrench

OPTIONAL PARTS

Installing the stock judder (boss) spring and seat is optional. However, this option is only available for the Honda and Kawasaki models. If your bike is equipped with these parts, the spring and seat can either be omitted or reused with the Rekluse auto-clutch. If reused, they may help to reduce clutch noise, but might also make the clutch lever feel more vague, widening the modulation and/or introducing more clutch drag at idle when the bike is in gear. To improve this, increase the installed gap slightly.

If your bike did not come with a stock judder spring, it can be purchased separately from a Honda dealer. Rekluse recommends installing the judder spring, seat, and friction on Honda 450s, 450X, and 2-stroke CR250R. This part will also fit the Kawasaki 450s.

The Honda part numbers for both Honda and Kawasaki:

- Judder Spring Seat: #22125-MBN-670
- Judder Spring: # 22402-MBN-670
- CL Friction Disk: #22201-MBN-670

BIKE PREPARATION AND DISASSEMBLY

1. Before you begin, read these instructions carefully, and check to ensure all parts are present.
2. Disconnect the clutch cable at the clutch perch.
3. Shut off fuel at petcock. Lay bike on left side. CAUTION: fuel may drain from carburetor; to prevent fire hazard, place a suitable container beneath bike to catch fuel.
4. Remove clutch cover.
5. Remove bolts and springs from OEM pressure plate.
6. Remove OEM pressure plate.

   NOTE: Flat throw-out thrust washer (coupled with needle bearing and OEM throw-out) may be stuck to bottom of OEM pressure plate. Retain, as it will be re-used.

7. Remove OEM clutch throw out and set aside. It will be re-installed.
8. Remove the clutch pack (friction disks and drive plates). Separate the friction disks from the pack, as they will be re-installed.
9. If your bike has an OEM judder (boss) spring and seat located at base of OEM center clutch, remove them and set aside.
10. Remove the OEM center clutch hub following the steps outlined in the vehicle manufacturer's service manual. Also, see the center clutch removal tip sheet (Appendix A) for further assistance.
11. Retain OEM thrust washer located between OEM clutch basket and OEM center clutch hub.

    NOTE: Thrust washer may be stuck to bottom of OEM center clutch hub.

12. **Aprilia 450/550 and Suzuki RM250 2-stroke owners ONLY:** Remove stock clutch basket and install Rekluse Clutch Basket prior to step 13. Refer to included Rekluse Clutch Basket Installation Guide for instructions.

CLUTCH BASKET INSPECTION

NOTE: The following outlines Clutch Basket Damper Failure. Some Clutch baskets will last a season, and some last only hours. If the dampers go unchecked, clutch damage will result. After inspecting the basket, continue with the z-Start Pro installation.

Clutch Basket Damper Operation

Most OEM Clutches use elastomer dampers to protect the clutch from shock loading applied to the basket by the drive train and/or engine during normal operating conditions. The dampers are located between the clutch basket body and the ring gear. These dampers take up the slack between the ring gear and clutch basket so that under normal loading they rotate as one. Under extreme loading, the dampers provide a cushion so the ring gear and basket can float independently and keep shock loads from being transferred to the clutch.

As the dampers wear, the system gains slack and shock loads begin transferring to the clutch. This creates a hammering effect between the clutch basket and ring gear. The hammering transfers to the clutch plates and causes the plates to wear away at the clutch basket and center clutch hub. If the dampers continue to go unchecked, the hammering progresses until the clutch fails.

Checking Your Clutch Basket for Damper Failure

Prior to installing the z-Start Pro, it is recommended that you check the condition of you Clutch Basket and Center Clutch Hub.
An indication of failing clutch basket dampers is grooving or notching of the Clutch Basket Tangs—where the tabs of the friction discs index into the clutch basket. See the following picture.

Another indication of failing dampers is notching of the center clutch hub where the steel drive plates index to it.

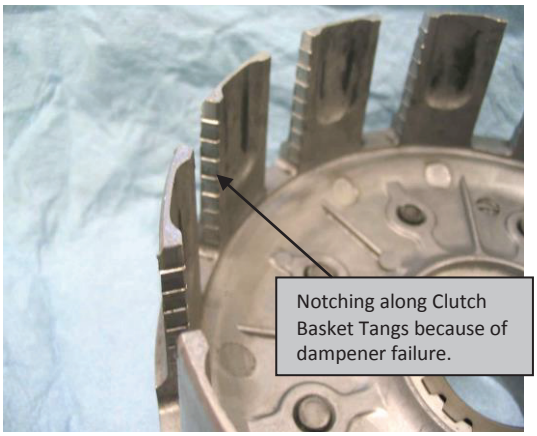

Maintaining Clutch Basket Dampers

Unfortunately, the OEM clutch basket does not provide a means to maintain the dampers. After the dampers wear out, the clutch basket must be replaced. The choice is either an OEM clutch basket, or an aftermarket basket. The advantage of an aftermarket basket is that the dampers are serviceable. Rekluse offers aftermarket clutch baskets specially designed for greater performance with the z-Start Pro.

WARNING: Installing the z-Start into a worn out clutch basket can greatly reduce clutch performance, and damage the z-Start Pressure Plate.

INSTALLING THE Z-START PRO CENTER CLUTCH

13. Install the Rekluse Center Clutch with the OEM thrust washer behind it on top of the basket.

14. Install the included Rekluse external tab lock washer* over the main-shaft on top of the Rekluse center clutch.

***NOTE:** KX/KLX/KFX450F, KX250F, '04-'06 RMZ 250, '06-'08 RM250, YZ/WR250F and 2012 WR450 use OEM lock washer.

NOTE: Some Honda models use a flat washer under the OEM lock washer. For these models, re-use the OEM flat washer under the Rekluse lock washer.

15. Torque the center clutch nut to **50 ft-lb (67.8 N-m)**.

16. Using a pair of adjustable pliers, bend remaining two tabs of external tab washer up against the nut to secure it. **See photo below.**

INSTALLING THE CLUTCH PACK

17. The 8 Rekluse steel drive plates packaged with the Rekluse Center Clutch come pre-measured and are the 8 steel drive plates you will start with.

Install 1 Rekluse steel drive plate first onto the Rekluse Center Clutch.

NOTE: A Rekluse steel drive plate must be the first clutch plate installed.

18. Install the stock friction disks with a Rekluse steel drive plate between each one. (**Aprilia owners** – see tuning guide before proceeding). **:**

NOTE: Some bikes have 9 friction disks stock. **With the z-Start Pro you use 8 Friction disks.**

If you choose to install the judder (boss) spring and seat (Honda and Kawasaki only), you will use the OEM friction disk with the wider internal diameter and only 7 Rekluse friction disks for 8 total friction disks.

Top of Pack

Stock Friction disk **Last Plate In**
Rekluse Steel Drive Plate
Stock Friction disk
Rekluse Steel Drive Plate
Stock Friction disk
Rekluse Steel Drive Plate
Stock Friction disk
Rekluse Steel Drive Plate
Stock Friction disk
Rekluse Steel Drive Plate
Stock Friction disk
Rekluse Steel Drive Plate
Stock Friction disk
Rekluse Steel Drive Plate
Stock Friction disk (or OEM friction with wider diameter, judder spring seat, and spring)
Rekluse Steel Drive Plate **First Plate In**

Bottom of pack

CRF450 owners only:

Honda 450s - ’09 or Newer:
Install the first .040” steel drive plate, then reinstall your narrow OEM friction disk as the bottom most friction, with the OEM judder spring seat and judder (boss) spring oriented cup side up.

Older Honda 450s, 450X, 2-stroke CR250R, and Kawasaki 450s:
The judder spring, seat, and friction can be added to the clutch pack to reduce/prevent clutch pack squeal and chatter. These parts are not required, but recommended.

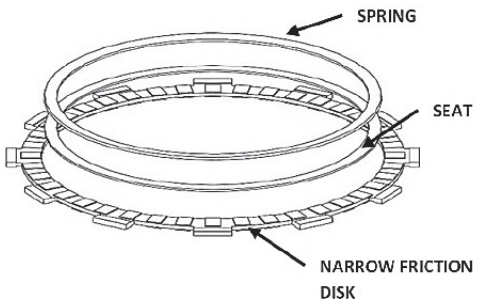

If judder spring and seat are installed, assemble the clutch in the following order.

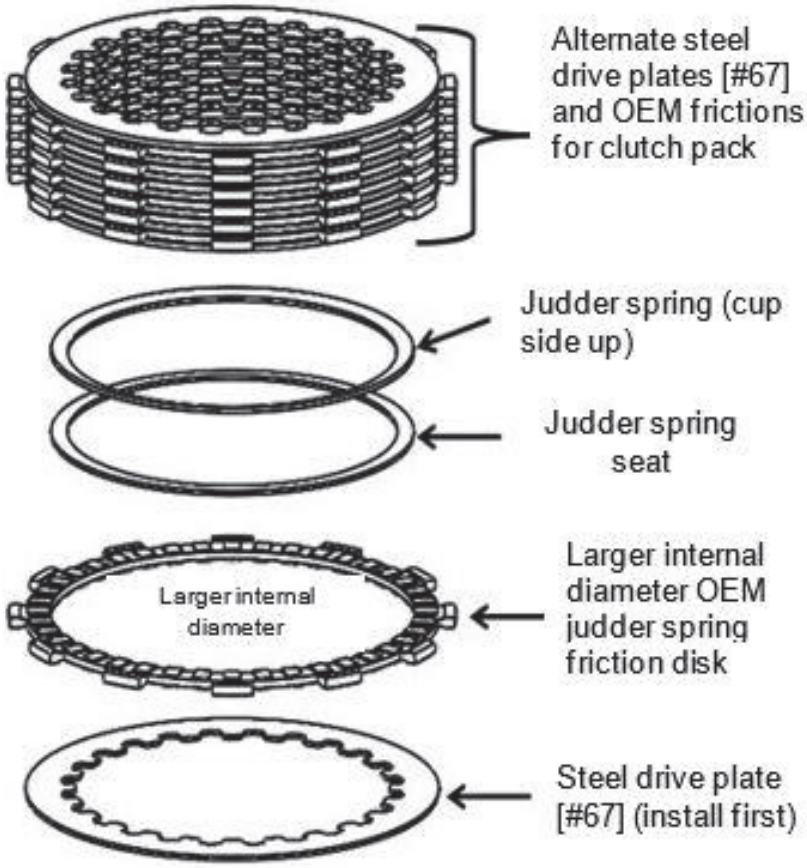

19. Place lower assembly into Rekluse center clutch hub. You must align the three cut-outs in the lower assembly with the corresponding tabs in the center clutch. **NOTE:** some models only have two cut-outs.

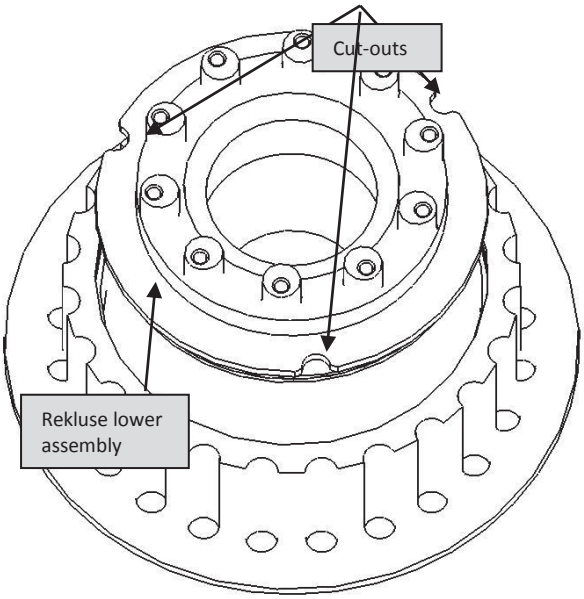

20. Using a pair of mechanics gloves (the edges of the ring can be sharp and may cut you), install the retaining ring into the Rekluse Center Clutch ring groove.

You must ensure the retaining ring is snapped into the groove. Start the square end of the ring and thread the ring into the groove as shown, ensuring that the scalloped end of the ring is clockwise in relation to the square end.

WARNING: Scalloped end of ring MUST be oriented as shown above-right.

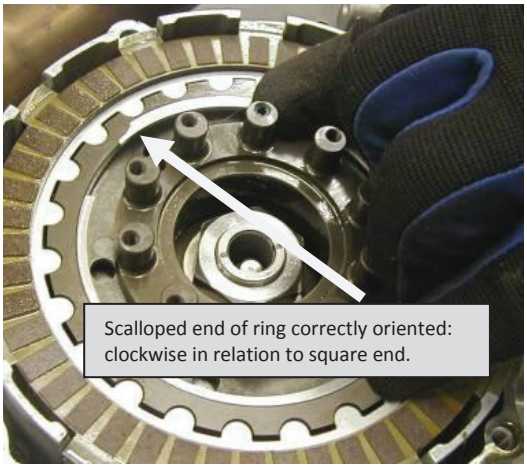

Threading retaining ring into groove

Use a screwdriver to ensure the ring is seated by sliding along the ring's inner diameter.

WARNING: It is *CRITICAL* that the retaining ring is fully seated using a screwdriver, or clutch damage WILL occur.

21. Install OEM clutch throw-out with bearing and washer on top into the transmission shaft. Ensure the needle bearing and flat thrust washer is placed on top of throw-out. Note: some models may have a circlip that retains washer and bearing to throw-out.

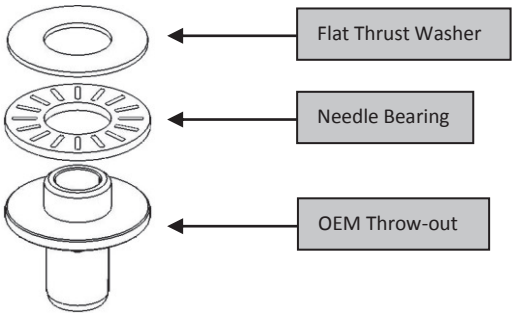

NOTE: RMZ250 bearing has rollers on only one side. Rollers MUST face down onto throw-out.

22. Install the Rekluse throw-out spacer on top of the throw-out.

NOTE: YZ250 owners be sure to use throw-out spacer (etched with part #002A) and **NOT** brake spacer (which has raised surface) referred to in step 37.

23. Configure throw-out according to following diagrams:

All models ***EXCEPT*** 2004-2009

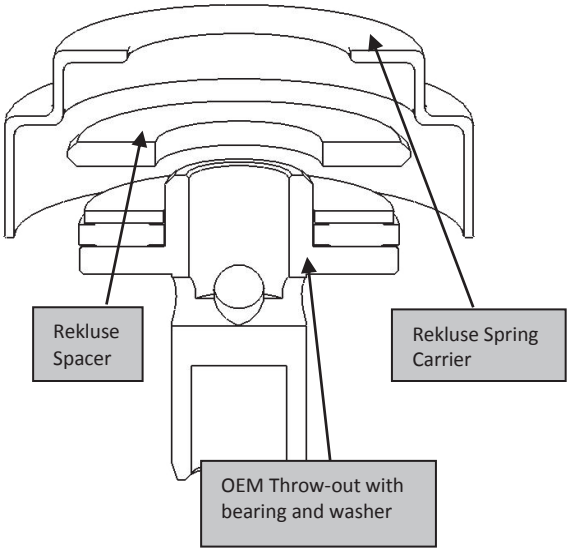

2004-2009 CRF250R/X

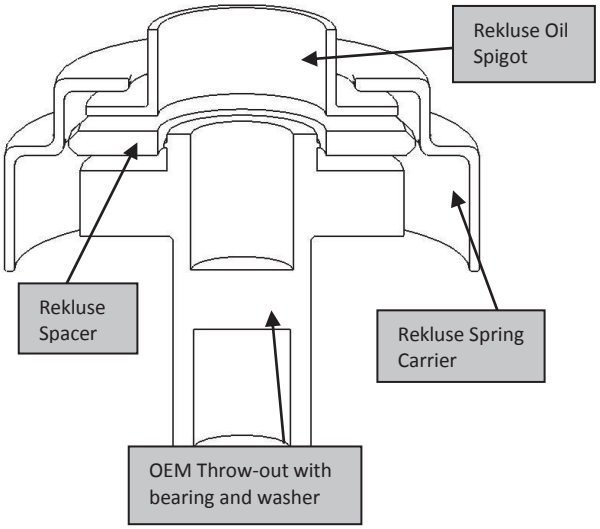

24. Read the Setup and Tuning Guide to determine desired spring setting.

25. Install the C150 wave spring on top of clutch lever return spring carrier.

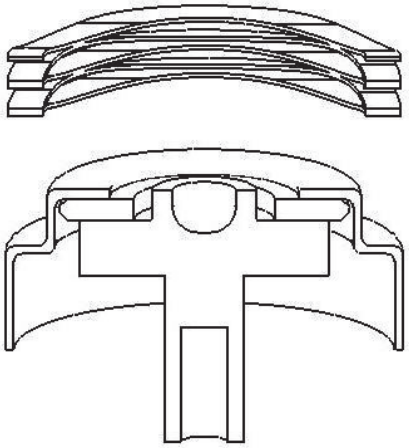

26. Install the C200 wave spring (if used by chosen configuration) on top of rotating hub into the locating pocket.

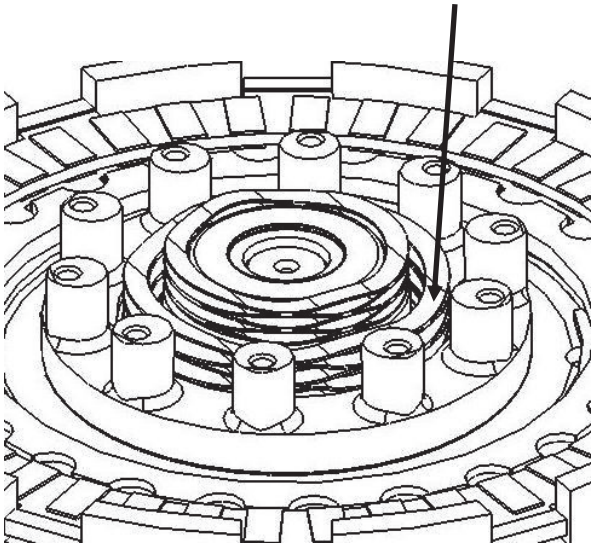

27. Place a small amount of oil into the ball grooves of the Rekluse Pressure Plate.

28. Away from the bike, install the steel balls into the pressure plate ball grooves. Refer to Setup and Tuning Guide for desired number of balls and proper distribution pattern.

If your basket has 2 sets of slots, make sure you index the Rekluse pressure plate tabs into the main/deep slots.

29. Push and hold the pressure plate down, overcoming the wave spring(s) so the 10 rotating hub posts index into the 10 pressure plate holes.

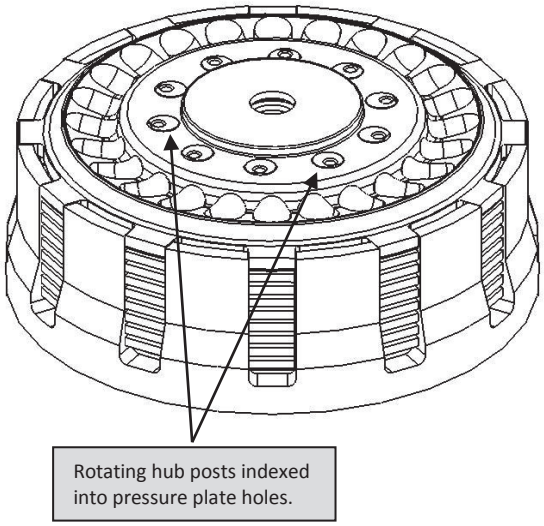

30. While holding down the pressure plate so it is indexed with the basket and 10 rotating hub posts properly, place the Rekluse top plate over the Rekluse pressure plate and thread in 2 torx head screws180° across from one another. Lightly tighten the 2 screws to secure the Rekluse top plate.

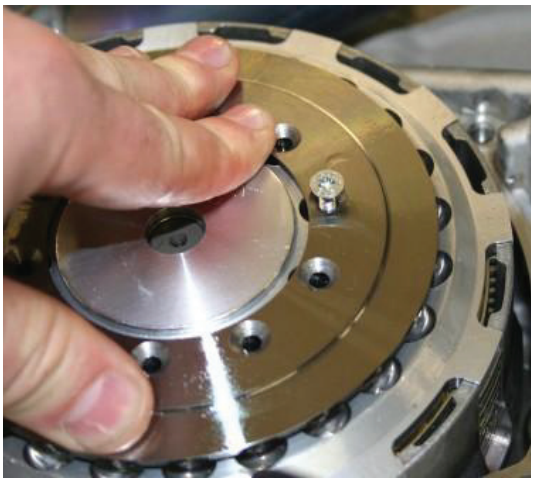

DETERMINE THE INSTALLED GAP OF THE Z-START PRO CLUTCH

NOTE: Installed gap is measured using two no-go wire gauges.
If gauges **do not** slide between Rekluse pressure plate and ***the pads*** of the top friction disk, your **installed gap is correct**.
If gauges **do** slide between the Rekluse pressure plate and ***the pads*** of the top friction disk, the installed gap is too wide and you **need to adjust your installed gap** according to step 33.

31. Verify that the top-most friction disk moves up and down freely between the Pressure Plate and top-most steel drive plate by pulling up and down on top-most friction disk. If no "float" exists, top-most ***steel drive plate*** has become disoriented during previous step and needs to be re-installed.

32. Attempt to slide the shorter legs of the 2 included .050" *no-go* wire gauges **between the Rekluse pressure plate and the friction pads** on the top friction disk, 180° apart.

- Or, you can measure your installed gap with blade style feeler gauges The gap should be between .028in. and .045in.

If clutch pack wear exists, gauges will slide in with slight resistance. Do not force the gauges in. If the gauges ***do not*** slide in smoothly then the Installed Gap is good and you can move on to step 34.

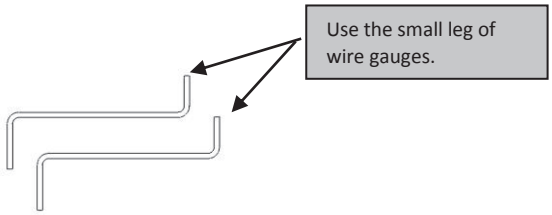

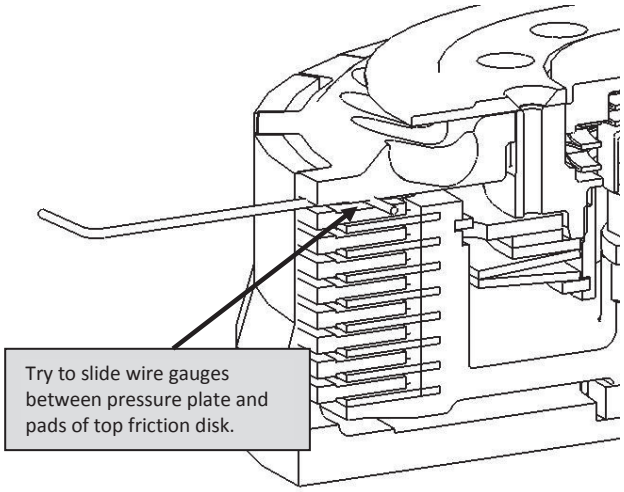

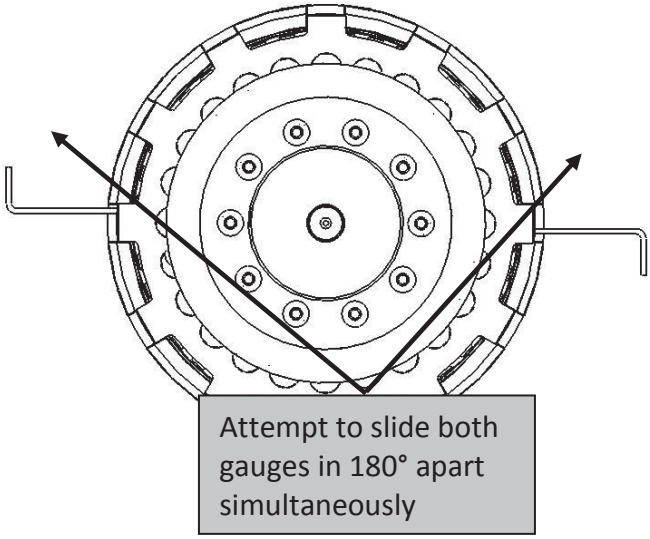

33. If the wire gauges slide in ***smoothly***, the clutch pack needs adjustment. Swap the thick Rekluse adjustment drive plate for the top drive plate. Repeat step 32.

NOTE: The adjustment drive plate is .060" for small bore bikes and .065" for big bore bikes. Once the drive plate has been used and the clutch wears enough so the wire gauges slide in again, the friction disks need to be replaced.

34. Install the remaining 8 Torx head screws using

blue Loctite 243 and torque to 25 in-lb (2.08 ft-lb).

35. Remove the 2 screws originally installed without Loctite, apply Loctite and torque.

36. Re-install the clutch cover with thicker Rekluse Gasket—only the YZ/WR 250F, CR500, and 2010+ CRF250R do not require a thicker gasket. Lightly tighten all of the cover bolts before full torque is applied, or you may break the cover. **Note:** Aprilia models refer to tuning chart before installing clutch cover.

WARNING: If your kit came with two gaskets, you **MUST** use both or clutch damage will result.

*(**Exception 1**: CRF 450R. If you have the RMS-813 kit, two gaskets are included; one gasket applies to 02-08 model years and the other to 2013+ models.) If your bike is 09-11, disregard this message and use the one supplied gasket.*

*(**Exception 2**: CR 250R. This kit includes two gaskets; one gasket applies to 97-01 model years and the other to 02-07 models.)*

37. '99-'04 YZ250 only: Install the brake pedal spacer with the raised surface towards the brake pedal as shown:

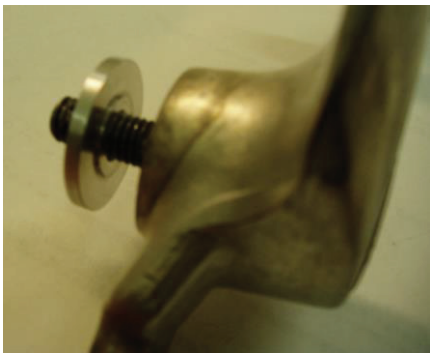

38. Reconnect the clutch cable to the lever and stand the bike upright.

IMPORTANT: SEE NEXT PAGE OF INSTRUCTIONS FOR PROPER CABLE SLACK SETTING

Adjust the cable slack for the z-Start Pro (**SEE NEXT PAGE**).

SETTING CLUTCH CABLE SLACK

IMPORTANT: *Cable slack adjustment is **critical.** The cable slack must be adjusted properly and maintained frequently. Failure to do so will result in clutch failure.*
Adjusting cable slack is different with a z-Start Pro Clutch installed. Cable slack adjustment requires starting the motor in neutral and revving to a minimum of 4500 RPMs (approximately ½-throttle) while checking for lever free play. **There must be clutch lever free play while *holding* a minimum of 4500 RPM.**

If there is not enough cable slack, the clutch will slip excessively causing the clutch to fail.

Too much cable slack reduces the ability to disengage the clutch at higher RPMs.

WARNING: ***Ensure the bike is in neutral*** or it could lunge forward unexpectedly when revving the engine.

Place the bike into neutral and start the engine. While holding a minimum of 4500 RPM, check for 1/2" (1cm) of play at the end of the clutch lever before you feel significant resistance. Adjust cable slack accordingly using stock cable slack adjuster(s).

In other words, when revving the engine, clutch lever free play should feel like stock.

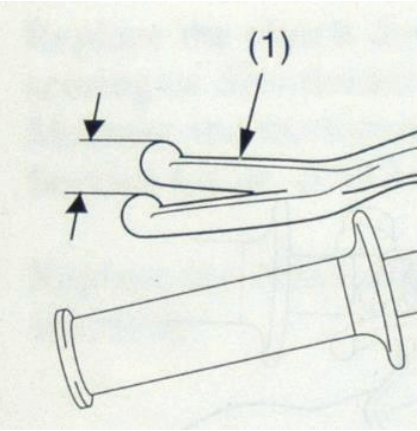

Tip: Use one finger with light pull when checking for lever free play. This will make it easier to distinguish between the light resistance of the lever return spring and the significant resistance felt when disengaging the Rekluse pressure plate.

Note: Be sure to review the included Break-in and Maintenance Guide for clutch pack wear adjustments.

WARNING: After a 20 minute break-in period, the clutch plates will seat in and you must re-measure the Installed Gap to guarantee the Installed Gap is within the prescribed range—make drive plate adjustments if necessary. Clutch break-in re-measurement of the Installed Gap is necessary whenever new clutch plates are installed.

Refer to the “Safety Warnings” and “Break-in Tuning and Maintenance Guide” before operating the z-Start Pro clutch.

APPENDIX A – CENTER CLUTCH REMOVAL TIP SHEET

The following covers 3 methods for removing the OEM center clutch from your motorcycle or ATV. **At no time should you ever pry against the standoffs of the OEM center clutch because they are easily broken.**

Note: If your bike has an external tab lock washer, use a flat blade screwdriver to pry the tabs away from the nut. Next use a hammer and punch to lightly tap the tabs flat.

1. **Pneumatic or electric impact gun:**
   Place the bike in gear and remove the nut

2. **Clutch Holding Tool:**
   Example: Motion Pro # 08-0008
   Use the clutch holding tool to hold the center clutch while using a wrench to remove the center clutch nut.

3. **Holding the Rear Brake:**
   Place the bike in 4th or 5th gear (a higher gear gives you more mechanical advantage). Apply the rear brake firmly and hold firmly while using a wrench to remove the center clutch nut. A second set of hands is helpful.

Rekluse Motor Sports
z-Start Pro Tuning Chart
Honda CRF450R/CRF450X

198-813

Manual Revision: 022508

Engagement RPM	Engagement Rate	Spring(s)	Balls
LOW	Hard	C150L4	27
	Soft	C150L4	24
MEDIUM*	**HARD***	**C200L3 & C150L4**	**27**
	Soft	C200L3 & C150L4	24
HIGH	Hard	C200L3 & C150M3	27
	Soft	C200L3 & C150M3	24

***- Medium/Hard is the recommended initial setting.**

NOTE: Empty ball slots must be evenly spaced around the pressure plate. The pattern for the ***24 ball setup*** is 8 balls followed by 1 empty slot.

Important Tuning Tip: Idle setting is a ***critical*** component in tuning your z-Start Pro. Setting your idle speed *at or slightly above* your Engagement RPM will yield engine braking close to stock. Setting your idle speed *below* your Engagement RPM will yield more of a freewheeling effect.

Definition of Terms	
Engagement RPM Low, Medium, High	Refers to the engagement ***RPM*** of the clutch, i.e. the RPM at which the clutch starts to engage and move the bike forward. Low gives an engagement point at or below a normal engine idle speed. High raises the engagement point to above a normal engine idle speed. ***In general***, off-road riders prefer a low-to-medium engagement RPM, while motocross riders prefer a medium-to-high engagement RPM.
Engagement Rate Hard, Soft	Refers to the engagement ***rate*** of the clutch. Hard gives full clutch lockup more quickly than Soft and therefore makes the bike feel more snappy. Hard is recommended for beginning to experienced riders. To maximize clutch plate life you should use Hard settings, as Soft settings allow the clutch to slip more. Soft is recommended for experienced riders only.

Rekluse Motor Sports
Break-in and Maintenance Guide
z-Start Pro

193-292
Manual Revision: 062507

Initial Break-in

Before starting the initial break-in procedure, the z-Start Pro must be installed according to the instructions and the clutch cable slack must be set correctly. See the z-Start Pro Installation guide for instructions on how to set the cable slack.

The z-Start Pro requires a small amount of break-in time before it will operate smoothly. The break-in time allows the balls to “wear” into their grooves, reducing friction. Place the bike in neutral and start your bike, allowing it to warm up for 2-3 minutes or until you can begin to feel some warmth from the clutch cover. Shut off the bike and place it in second gear. Roll the bike back and forth to work some warm oil between the clutch plates. Place the bike back into neutral and start it again. Make sure the bike comes down to a reasonable idle speed (1500 to 2000 RPM’s). Pull in the clutch lever and click the bike into gear. Slowly release the clutch lever. The bike should stay in place with little or no forward creep (depending on configuration and idle).

Once you have the bike idling with first gear engaged, slowly apply the throttle to begin moving. To break-in the z-Start Pro, in first gear, slowly accelerate to 4000 RPM and slowly come to a stop—repeat this 10 times. Next, in first gear, slowly accelerate to 6000 RPM and slowly come to a stop—repeat this 10 times. These 20 acceleration/deceleration cycles will help with the initial break-in process of the z-Start.

If you continue to have problems with stalling, make sure your idle speed is set correctly (1800-2000 RPM’s) and your fuel screw is set correctly. If you continually have problems with stalling, re-check your installed gap to make sure the measurement is correct.

To ensure peak clutch operation, change oil after initial break-in period.

Kickstarter Bolt

If you lose your kickstarter with an automatic clutch you will not be able to bump-start your bike. It is a good idea to Loctite your kickstarter bolt to make sure it does not fall off on a long ride.

Clutch Abuse

An automatic clutch does not turn your motorcycle into a Continuously Variable Transmission. Although it is possible to put your bike in 4th gear and ride around smoothly at almost any speed between 1 MPH and 50 MPH, this type of riding is very hard on your clutch and could cause your engine to overheat. In the lower gears, load on the clutch is lower and full engagement of the clutch comes at relatively low engine speeds on flat, hard ground. In the higher gears, load on the clutch is much higher and full engagement of the clutch does not come until much higher speeds. Riding conditions also play a significant role in load on the clutch and the potential for excessive slipping. Riding in sand, mud or snow will increase load on the clutch significantly. Riding uphill will also increase load on the clutch. Higher engagements speeds and softer engagement rates will cause your clutch to slip more.

Checking for Full Clutch Engagement

If you suspect the z-Start Pro is not engaging your clutch fully, it is important to check your installed gap measurement to make sure the z-Start Pro is able to apply full pressure into the clutch. Checking the installed gap is described in the Installation Guide.

Note: the following test should only be performed by experienced riders that are familiar with the motorcycle and the z-Start Pro clutch.

Acceleration testing is a quick way to check for full clutch engagement. Find a safe, open area that you are familiar with and that has good traction. Put your bike into 3rd gear. At a speed of 5 to 10 MPH, slowly apply full throttle while applying the rear brake. The clutch should engage positively by 4000 RPM's causing the engine to "lug". The engine RPM’s should not rise rapidly into the RPM’s without corresponding acceleration. If the engine RPM’s rise rapidly without a corresponding rise in acceleration, the clutch is slipping too much and the installed gap needs to be re-measured or the friction disks may need to be replaced.

Maintenance

During normal operation, the z-Start Pro components should last hundreds of hours of use without replacement. However, improper setup or very aggressive riding can increase wear. A worn clutch basket will also significantly increase wear on the z-Start Pro components. The installed gap measurement described in the installation manual should be checked once every 25 hours of use for aggressive riding and once every 50 hours of use for moderate riding. If you notice any excessive slipping of the clutch, especially at medium to higher engine speeds, re-measure your installed gap.

Every 100 hours of aggressive riding or every 200 hours of moderate riding, the z-Start should be disassembled and inspected for wear and deterioration of all parts. Remove the z-Start from the bike and carefully check each component for excessive wear and cracks

The *Top Plate* will have wear marks where the *Balls* travel. The wear marks should be smooth lines. If you notice any dimples forming, the Top Plate should be replaced.

Important Note: whenever you replace clutch plates, be sure to recheck your z-Start Pro installed gap after a short clutch break-in period. Some clutch plates will “seat-in” initially, increasing the installed gap between the z-Start Pro and the rest of your clutch plates. After riding with the new clutch plates for 20 minutes, recheck your installed gap as outlined in your Installation Guide.

Rekluse Motor Sports
z-Start Pro Tuning Guide

193-293

Manual Revision: 100812

The z-Start Pro can be tuned to suit a wide range of riders, terrain and bikes. The engagement RPM and engagement rate settings will have a dramatic effect on how the z-Start Pro performs. A low engagement RPM with a harder engagement rate will have very little slip as the clutch engages. A high engagement RPM with a softer engagement rate will slip the clutch more as the clutch engages. Choosing the right setting depends on many factors.

The Short Answer

If you don't want to read four pages of technical information on how to set up your z-Start Pro clutch, then here's all you need to know… Go to the **Tuning Chart** included with your z-Start Pro and choose the ***Medium Engagement RPM*** and the ***Harder Engagement Rate***.

The Long Answer

There are three primary tuning options for the z-Start Pro:

Engagement RPM - RPM at which the clutch first begins to engage (adjusted with different springs)
Engagement rate - how quickly the clutch fully engages once it begins to engage (adjusted with number of balls used)
Engine idle speed - engine's steady idle RPM (revolutions per minute) when then engine is warm.

Engagement RPM

The engagement RPM is set using wave springs within the z-Start Pro clutch. There are three engagement RPM settings: low, medium and high. The low engagement RPM setting begins to engage the clutch at or just below a normal engine idle speed. The medium engagement RPM begins to engage the clutch just above a normal engine idle speed. The high engagement RPM begins to engage the clutch several hundred RPMs above a normal idle speed.

Engagement Rate

There are two engagement rate settings included with your z-Start Pro: softer and harder. The softer engagement rate provides more slip as the clutch engages at low RPMs. The harder engagement rate provides less slip as the clutch engages at low RPMs. If you are looking for even harder engagement rates, contact your authorized Rekluse dealer to purchase a tungsten carbide ball kit.

Engine Idle Speed

Engine idle speed is another very important tuning factor for the z-Start Pro clutch. If your idle speed is below your engagement RPM and you lock and then release the rear brake, the z-Start Pro clutch may not automatically re-engage and the bike may "free-wheel". By "blipping" the throttle to raise the RPMs, the clutch will re-engage and provide normal compression braking.

Most riders prefer consistent compression braking when the rear tire is locked and then released. To get consistent compression braking after the rear brake is released, the ***engagement speed must be below the idle speed***. In other words, the clutch should have some engagement drag at idle. Ideally with the bike in first gear on flat ground with no rider aboard, the bike should just be creeping forward.

If you prefer your bike to free-wheel after the rear tire is locked, make sure your idle speed is well below your engagement speed. Higher engagement speeds work better to get your bike to free-wheel after the rear tire is locked.

Choosing a Setup

There are three primary factors to consider when selecting an engagement set-up for the z-Start Pro: the motorcycle, the terrain and the riding style. There is no perfect setup for any particular rider, motorcycle or type of terrain. Try to understand the characteristics that are important to you in making a decision about setup. Remember, the set-up can always be changed.

The Motorcycle

Some motorcycles are more prone to engine stalls with certain setups than others. In general, two-stroke motorcycles will work well with almost any setup. Off-road oriented motorcycles are less prone to engine stalls. Four stroke motocross bikes, especially 450-class motorcycles, are more prone to engine stalls. Four-stroke motocross bikes are more likely to get engine stalls from the low engagement speed and hard engagement rate.

Motorcycles with lots of flywheel effect (most off-road oriented motorcycles) will generally perform better with the hard engagement rate and low or medium engagement speed. Motorcycles with less flywheel effect (motocross) will generally perform better with the soft engagement rate and medium or high engagement speed.

The Terrain

In general, if traction is low, the softer engagement rate will provide better traction. If traction is high, the harder engagement rate will perform well. Rocky, technical terrain is generally better suited to the softer engagement rate and the low or medium engagement speed. Most riders prefer the harder engagement rate in sand.

Riding Style

If you are new to riding with an automatic clutch, most riders feel more comfortable with the harder engagement rate. This is not necessarily the best setup for new automatic clutch riders though. If you are a “momentum” rider (ride in low RPMs, a gear or two high), choose the harder engagement rate and low or medium engagement speed. For most motocross riders, the softer engagement rate and medium or high engagement RPM will generally give the best lap times.

If you are just out to enjoy trail riding, the medium engagement RPM and the softer or harder engagement rate should work well.

Other Considerations

Compression Braking

The amount of compression braking the bike gives can be changed slightly with the idle speed and engagement speed. Higher engagement and idle speeds will slightly reduce the level of compression braking. Lower engagement speeds and idle speeds will keep the level of compression breaking very close to stock.

Regardless of engagement speed, the key to consistent re-engagement of compression braking after the rear tire is locked is clutch engagement drag at idle. If you are finding that your bike sometimes freewheels after the rear tire is locked, turn up your idle and/or lower your engagement speed.

Engine Stalling

There are two types of engine stalls associated with the use of an automatic clutch: acceleration stalls and braking stalls. Acceleration stalls are caused by the sudden loading of the engine at low RPMs with an open throttle. Braking stalls are caused by a sudden deceleration of the motor. The deceleration can come from the rear brake or from the rear tire hitting a steep object (like a large rock or a downed tree).

Acceleration stalls are most common on 4-stroke motocross bikes and are almost non-existent with 2-strokes. Twisting the throttle too quickly from low RPMs in taller gears can cause a “pop-stall”. There are several things you can do to minimize acceleration stalls. On a modern 4-stroke, getting the pilot jet adjusted correctly with the fuel screw is very important. Remember that temperature and elevation have a significant effect on your pilot jet setting. A heavier flywheel weight can also reduce acceleration stalls. Higher engagement speeds and softer engagement rates with the z-Start Pro will tend to reduce the incidence of acceleration stalls. Finally, good throttle control, rolling on the throttle instead of whacking it open, will reduce acceleration stalls.

Braking stalls are caused by the engine being decelerated very quickly to the idle point and/or the clutch not releasing quickly enough. Again, good low-speed carburetion is key to prevent braking stalls. Higher engagement RPMs and idle speeds will also reduce braking stalls. Often times, just slightly raising the bikes idle speed will eliminate braking stalls.

Detail Setting Descriptions

The following descriptions are for the internal spring and ball configurations found on the **z-Start Pro Tuning Chart**.

Low Engagement RPM, Softer Engagement Rate

On most bikes, this setting will give some clutch engagement drag at a normal idle. This setting will give good control in technical riding situations but may require more manual "clutching" to maximize acceleration out of corners in higher gears. This setting is better for high traction terrain.

Medium Engagement RPM, Softer Engagement Rate

On most bikes, this setting will require a normal to slightly higher idle to get enough engagement drag to maintain consistent compression braking. This setting gives good balance between control in technical riding situations and providing enough slip to maximize traction and acceleration in terrain with poor traction.

High Engagement RPM, Softer Engagement Rate

On most bikes, this setting will require a very high idle to get enough engagement drag to maintain consistent compression braking. This setting is geared towards maximizing acceleration, especially in low traction situations. This setting may cause the clutch to overheat in high-load, low RPM situations. This is a good setting for someone looking for a setup that will freewheel after the rear brake is locked and released (with a lower idle speed).

Low Engagement RPM, Harder Engagement Rate

On most bikes, this setting will give some clutch engagement drag at a normal idle. This setting is most susceptible to acceleration and braking stalls and provides very little slip. Control in rocky, technical situations is more difficult and the bike has a tendency to be "jumpy". This setting will require manual "clutching" to maximize acceleration out of corners and to be smooth in slower, rocky technical situations. This setting is best for well carbureted large displacement 4-strokes with lots of flywheel effect and 2-strokes where the rider is looking to do most of their clutching manually.

Medium Engagement RPM, Harder Engagement Rate

On most bikes, this setting will require a slightly higher than normal idle to get enough engagement drag to maintain consistent compression braking. This setting is much less susceptible to stalls than the Low Engagement Speed, Hard Engagement Rate. This setting still offers good control in technical riding situations and allows the motor to be lugged down low in the RPM range with very little slip. ***This is a recommended setting.***

High Engagement RPM, Harder Engagement Rate

On most bikes, this setting will require a high idle to get enough engagement drag to maintain consistent compression braking. This setting tends to have a bit of a "hit" to it. This setting is geared towards maximizing acceleration, especially in high traction situations, especially for motors that have lots of torque. This setting is not as well suited to technical riding situations. This is a good setting for someone looking for a setup that will freewheel after the rear brake is locked and released (with a lower idle speed).