REKLUSE® CoreManual with TorqDrive™

READ ME FIRST

Doc ID: 193-713A
Doc Revision: 110817

There are several crucial steps that must be understood and performed to ensure your clutch will function properly. Failure to properly install and maintain your clutch components will result in premature wear or failure.

New Friction Disk Break-In

⚠ WARNING

Failure to follow the oil screen inspection process after break in could cause motor oil delivery failure which can result in motor failure, serious injury, or death.

- Following the installation of a new set of friction disks, there will be a short break in period during which the friction disks will wear in somewhat. Following this wear in period, it is vital to inspect the oil screens.
    - Soak new friction disks in oil
    - Install new friction disks
    - Ride the bike for an initial period
    - Inspect the oil screens, and change oil as necessary

Damper Inspection (DDS clutches only)

During clutch installation, inspection of the OEM dampers is necessary. Follow the inspection process found in the installation manual.

- Remove OEM components called out in the installation manual
- Follow the damper inspection process found in the installation manual
- Replace dampers if necessary

INSTALLATION & USER'S GUIDE

TorqDrive® Clutch Pack

For CSS clutches

Doc ID: 191-2881A
Revision: 040919

©2018 Rekluse Motor Sports
Rekluse Motor Sports, Inc.
customerservice@rekluse.com

TABLE OF CONTENTS

OVERVIEW 2
INSTALLATION TIPS 3
TOOLS NEEDED 4
INCLUDED PARTS 5
DISASSEMBLE THE CLUTCH 6
CLUTCH PACK INSTALLATION 8
Notes for installation 8
Install the clutch pack 8
Finish installation 11
MAINTENANCE 12
Disk inspection examples 13
TROUBLESHOOTING 14
Performance issues 14
Clutch noise 15
NEED ADDITIONAL HELP? 16

OVERVIEW

This kit replaces the OE (Original Equipment) clutch pack with a Rekluse TorqDrive® clutch pack. The following parts are replace:

- All OE steel drive plates will be replaced with Rekluse steel drive plates.
- All OE friction disks will be replaced with Rekluse TorqDrive® disks.

INSTALLATION TIPS

- Read the safety information sheet included with your kit.
- Protect eyes and skin – wear safety glasses and thin disposable work gloves.
- Read this entire document before performing any steps.
- Lay the motorcycle on its left side when replacing the clutch. This makes the clutch work easier and eliminates the need to drain the oil.
- For optimal clutch performance Rekluse recommends using fresh, clean oil that **meets JASO-MA** oil rating requirements. Rekluse offers Factory Formulated Oil™ developed specifically for Rekluse products. Rekluse Factory Formulated Oil is a perfect complement to any OEM or aftermarket wet clutch. Visit www.rekluse.com to learn more.
- **This clutch pack is not legal to race with in the AMA Limited or Stock class.**

TOOLS NEEDED

4 mm Allen Wrench	5 mm Allen Wrench	8 mm Socket	T-25 Torx Bit
Torque Wrench	Fluid Catch Container		

Doc ID: 191-2881A
Doc Rev: 040919

INCLUDED PARTS

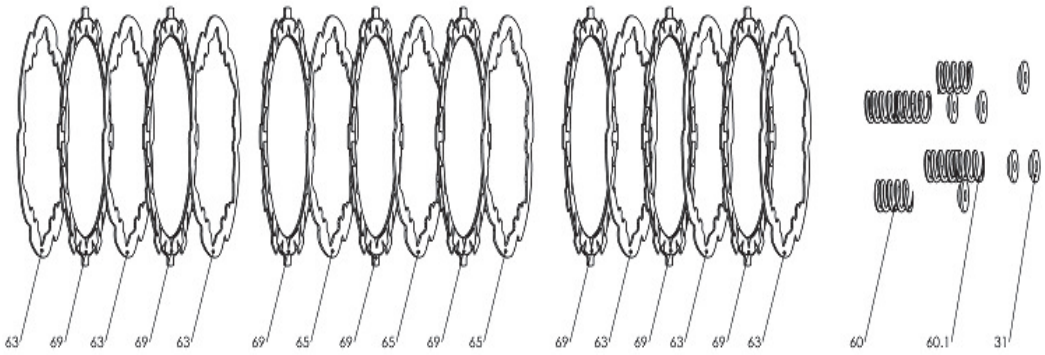

See Setup Sheet for bike specific information

Item	Description	Qty.
31	Screw sleeves	6
60 & 60.1	Pressure plate springs – colors vary	6 - 7*
63	Steel TEC drive plates – .040” (1 mm)	4 – 6*
65	Steel TEC drive plates – .048” (1.2 mm)	3 – 6*
69	TorqDrive® friction disks	8 – 9*

*Number depends on bike model

Visit www.rekluse.com/support for
a full parts fiche illustration and part numbers.

DISASSEMBLE THE CLUTCH

1. Turn the fuel petcock to “OFF” if applicable.

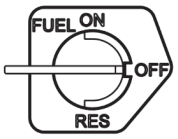

2. Lay the bike on its left side. Catch any fuel that might drain in a suitable container.

3. Use an 8 mm socket to remove the clutch cover. If your bike has an oil plug, loosen the plug before removing the cover.

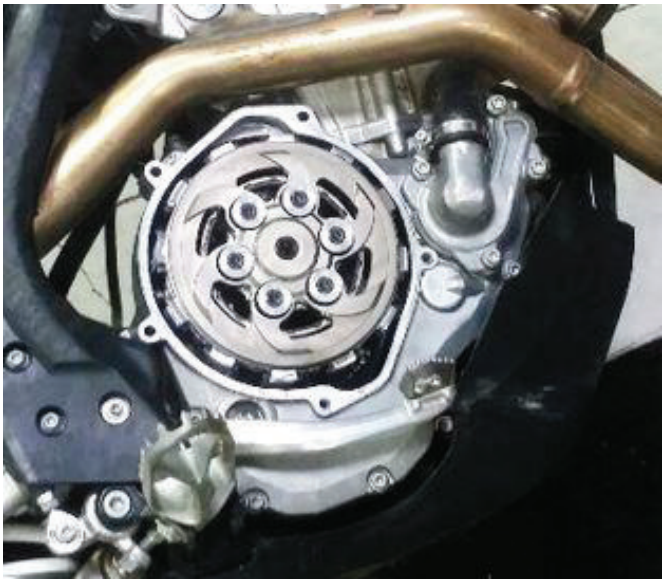

Doc ID: 191-2881A
Doc Rev: 040919

4. Use an 8 mm socket to remove the following OE parts:

- 6 pressure plate bolts
- Pressure plate springs
- Pressure plate
- OE clutch pack

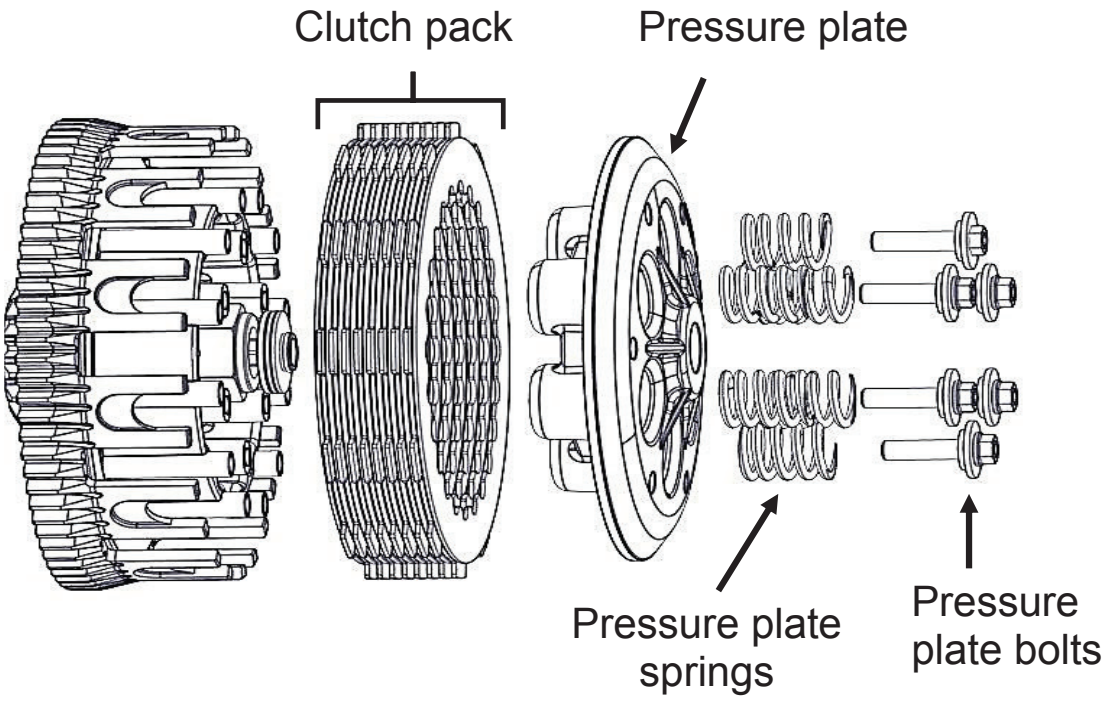

⚠CAUTION

Be careful that the drive pins do not fall into the engine while disassembling.

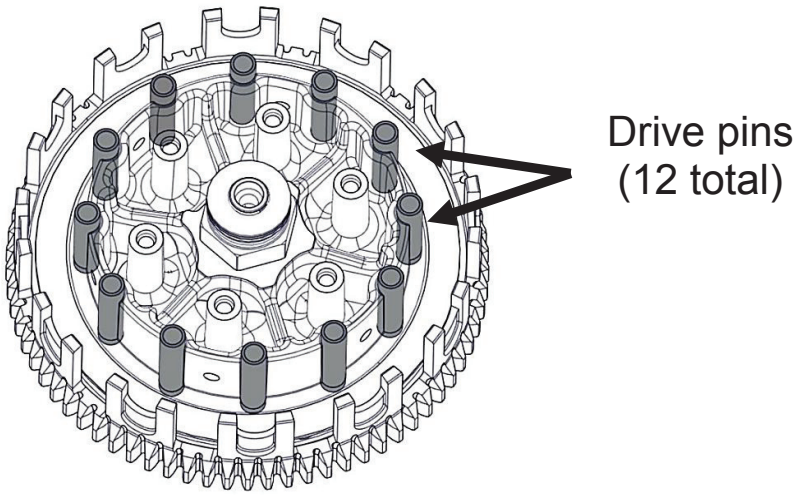

CLUTCH PACK INSTALLATION

Notes for installation

- *Some friction disks are marked with a small colored dot. This mark is used for processing and can be ignored.*
- *Some OE basket have "half slots" at the top of the basket tangs. Rekluse products require the entire clutch pack be installed into the MAIN (deeper) basket slots. Installing the clutch pack into the "half slots" will cause performance issues. See the following picture for reference.*

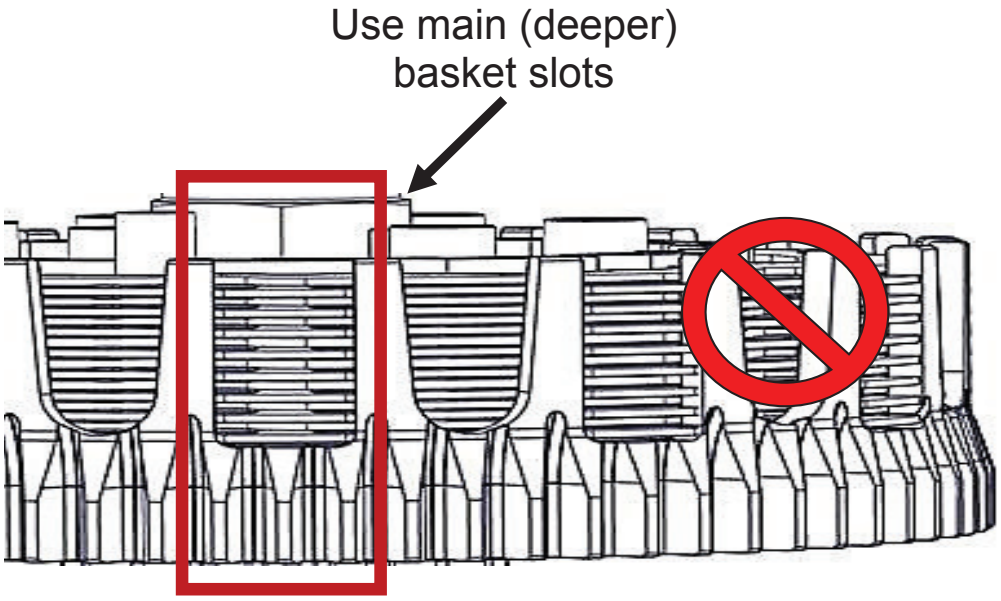

Install the clutch pack

1. Soak the friction disks in new oil for at least 5 minutes. Make sure the friction disks are coated on both sides.

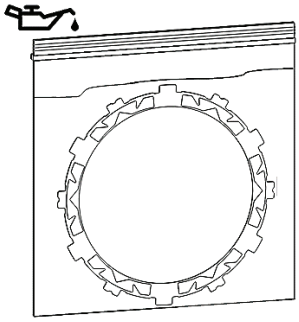

2. Remove every other drive pin from the inner hub. Only 6 drive pins are used with the Rekluse clutch pack.

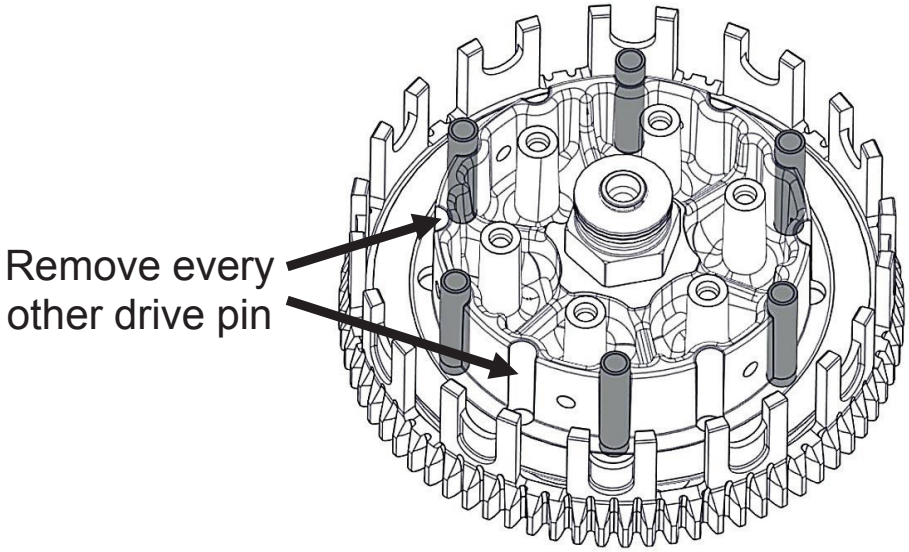

3. **Install the clutch pack according to the Setup Sheet**. *The orientation of the clutch pack is different for each bike. The number, thickness, and type of drive plates included in the kit also varies by bike. Please refer to the* ***Setup Sheet*** *at the back of the manual for specific information before installing the clutch pack.*

4. The steel drive plates are installed differently depending on the type of drive plate provided in your kit. The kit will have either have steel drive plates **OR** steel TEC drive plates.

    a. If steel drive plates are included, install the drive plate into the clutch basket.

    b. If the TEC drive plates are included, install the drive plate so that the “shark fin” notches face toward the right. ***All the drive plates will follow this orientation. See the following picture for reference.***

Note: *Proper orientation of the drive plates is critical for optimal clutch performance. If you install them backwards the clutch will still function but will lack proper modulation performance.*

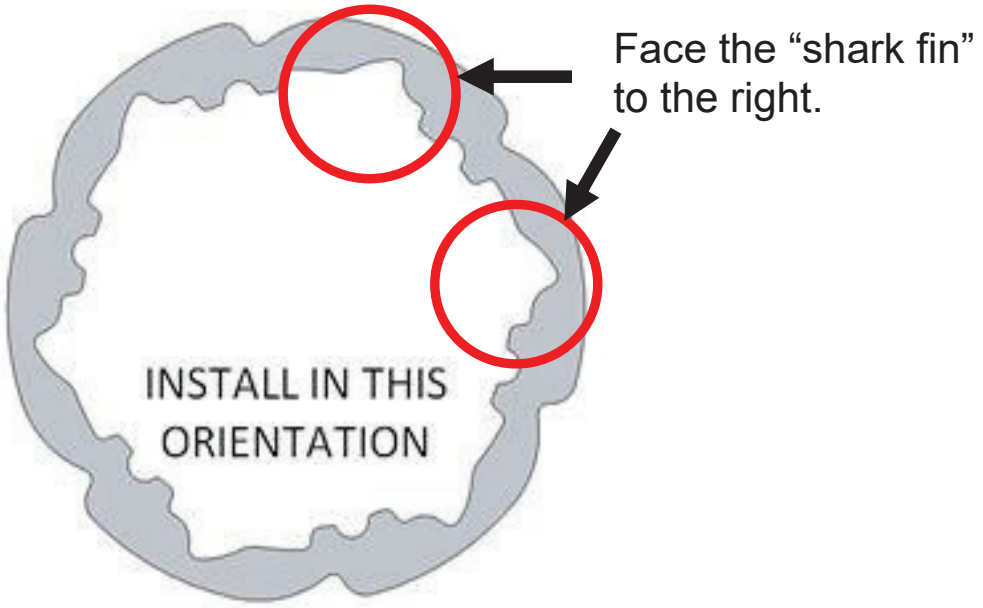

- Align the drive pin notches in the TEC drive plate with the drive pins on the hub, then install the drive plate into the basket. Be sure that the drive pins are seated in the notches and not in the bigger sections.

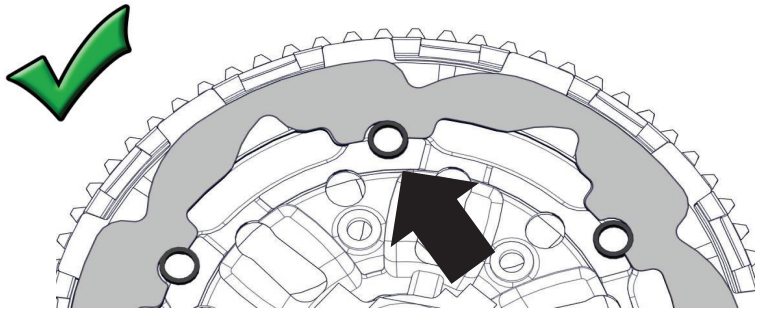

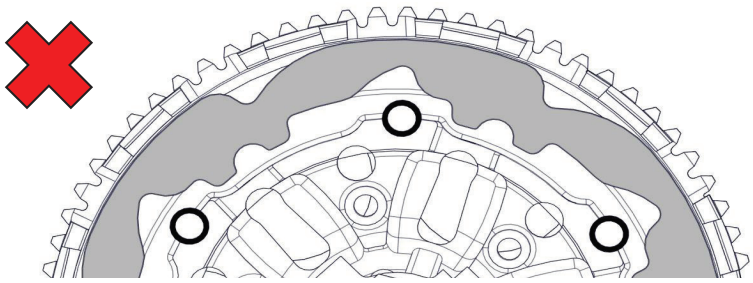

Note: *ALL the "shark fin" drive plates must be aligned in the drive pins notches or damage may occur. The plates will not move when installed correctly.*

FINISH INSTALLATION

1. Reinstall the pressure plate.
2. Install the Rekluse pressure plate springs in the specific pattern for your bike model.

2016+ 250 models and all other bikes:

- Install 4 pink springs and 2 orange springs in the pattern shown.

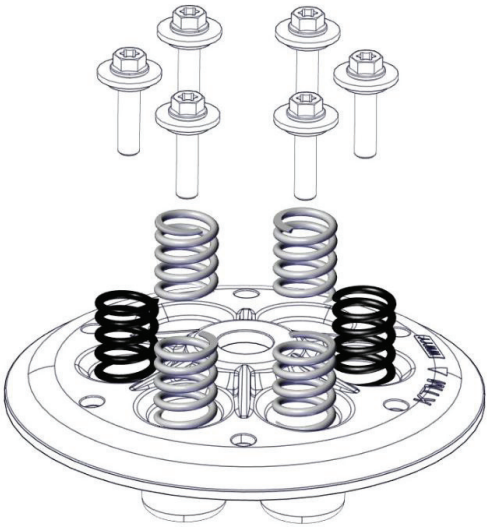

2016+ 350 models only:

- Install the springs by alternating 3 pink springs and 3 orange springs.

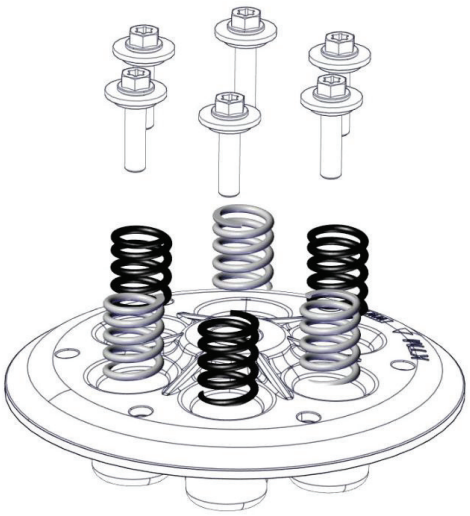

3. Reinstall the pressure plate screws.

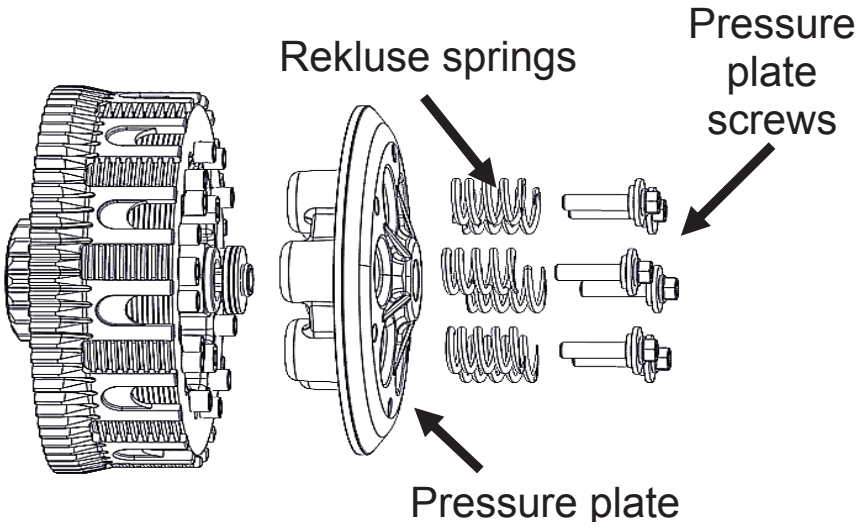

4. Loosely tighten the screws in a star pattern, then torque them in a star pattern to **9 ft-lb (12 N-m).**

5. Reinstall the clutch cover by lightly tightening the cover bolts in a star pattern. Tighten bolts in small increments before torqueing the cover bolts to OE specifications. *If your bike has an oil plug, tighten the oil plug.*

MAINTENANCE

To keep your clutch performing at its best, perform regular maintenance on your bike and clutch.

- Keep up with regular oil changes as per the bike manufacturer's recommendations. Clutch performance and longevity depends on clean oil.

- For optimal clutch performance Rekluse recommends using fresh, clean oil that **meets JASO-MA** oil rating requirements.

- Inspect all of your clutch parts for signs of wear or excessive heat, and replace components as necessary. Clutch wear is dependent on the riders use.
- Measuring the clutch pack can help determine if the components need replacing. See the **Setup Sheet** for the specific clutch pack measurements.
- Replace friction disks if they measure below specifications listed on the attached **Setup Sheet** or if the disks are glazed and/or burnt.
- Replace the drive plates if they show signs of excessive heat.

Disk inspection examples

When inspecting the clutch pack, the following pictures can be used as a reference. **These are best viewed in color by viewing this install document from www.rekluse.com/support.**

Drive Plates – If the clutch pack is getting high amounts of heat, purple, blue, or black color can be seen on the drive plate teeth. See pictures below. Not all drive plates look the same and may look different than pictured.

Normal Heat

High Heat (Blue)

Excessive Heat (Black)

Friction Disks – Due to the dark color of the friction material, the friction disks will appear almost black as soon as they are put in oil. During inspection, look for glazing of the friction material. Glazing will appear shiny and feel like glass, even after oil is cleaned from the friction disk. Not all friction disks look the same and may look different than pictured.

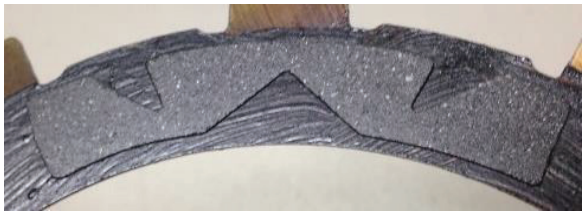

Normal Friction

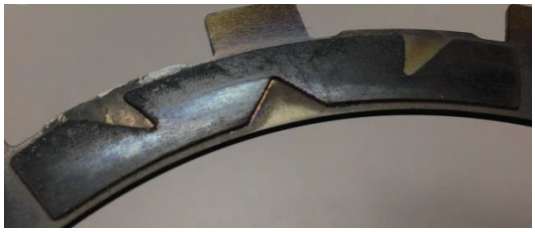

Glazed Friction

TROUBLESHOOTING

Performance issues

If you find yourself adjusting the slave cylinder to fix Free Play Gain or drag, the clutch disks might be worn. Excessive heat or clutch slip can cause premature clutch failure as well. Once extreme temperatures are reached, irreversible damage will occur.

- Inspect all of your clutch parts for signs of wear or excessive heat, and replace components as necessary. Clutch wear is dependent on the riders use.
- Measuring the clutch pack can help determine if the components need replacing. See the attached **Setup Sheet** for the specific clutch pack measurements.

Clutch noise

Although it is harmless, some bike models may have “squeal” or “chatter” coming from the clutch at low RPM as it engages. Clutch squeal is caused by the clutch components vibrating as the clutch engages and can become more audible as the clutch gets hot. Adjusting the installed gap will NOT affect clutch squeal or chatter.

For bike models that have clutch squeal or chatter here are some recommendations to reduce or eliminate it:

- Change the oil: Rekluse recommends that you have fresh, clean JASO-MA or JASO-MA2 rated oil for best clutch performance. Dirty or old oil can make the clutch more likely to squeal or chatter.

NEED ADDITIONAL HELP?

Website
www.rekluse.com/support

Frequently asked questions
www.rekluse.com/faq

Support Videos
www.rekluse.com/support/videos

Phone
(208) 426-0659

Technical Support
Contact Technical Support for questions related to product installation, tuning, and performance.

Hours:
Monday thru Friday: 8:00 a.m. - 5:00 p.m.
Mountain Time zone

Email: tech@rekluse.com

Customer Service
Contact Customer Service for additional product information, orders, and returns.

Hours:
Monday thru Friday: 8:00 a.m. - 5:00 p.m.
Mountain Time zone

Email: customerservice@rekluse.com

SETUP SHEET 198-2813081 FOR 250

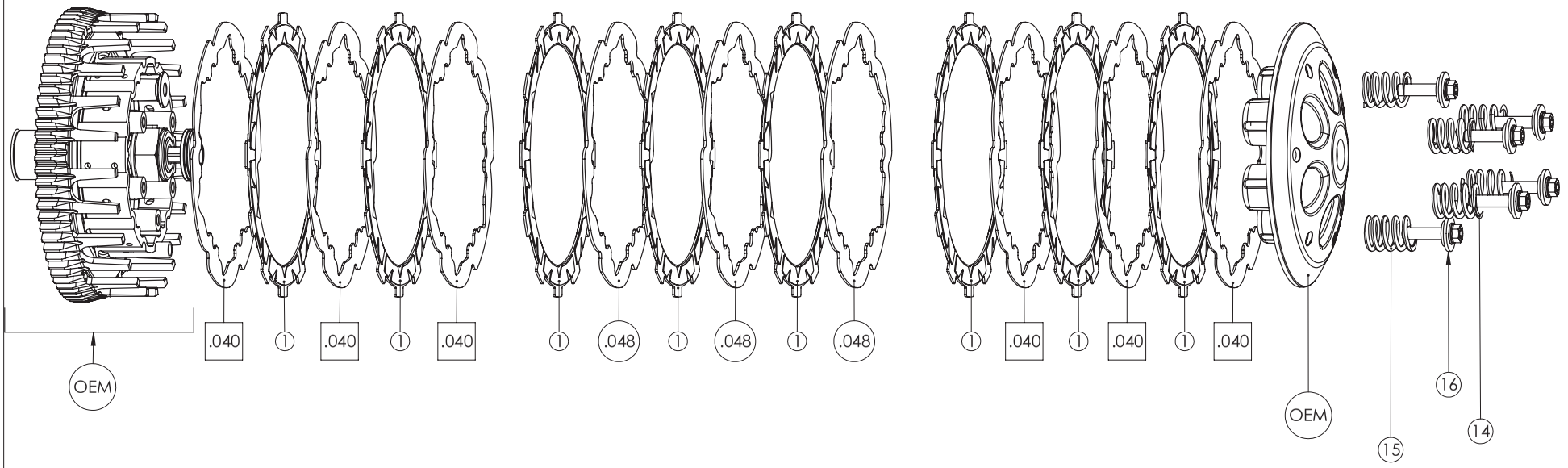

ITEM NO.	DESCRIPTION	QTY.
.040	DRIVE PLATE- .040in (1mm)	6
.048	DRIVE PLATE - .048in (1.2mm)	3
1	TORQDRIVE FRICTION	8
14	REKLUSE PINK SPRING	4
15	REKLUSE ORANGE SPRING	2
16	REKLUSE SPRING POST	6
28	SCREW SLEEVE, KTM CSS	1

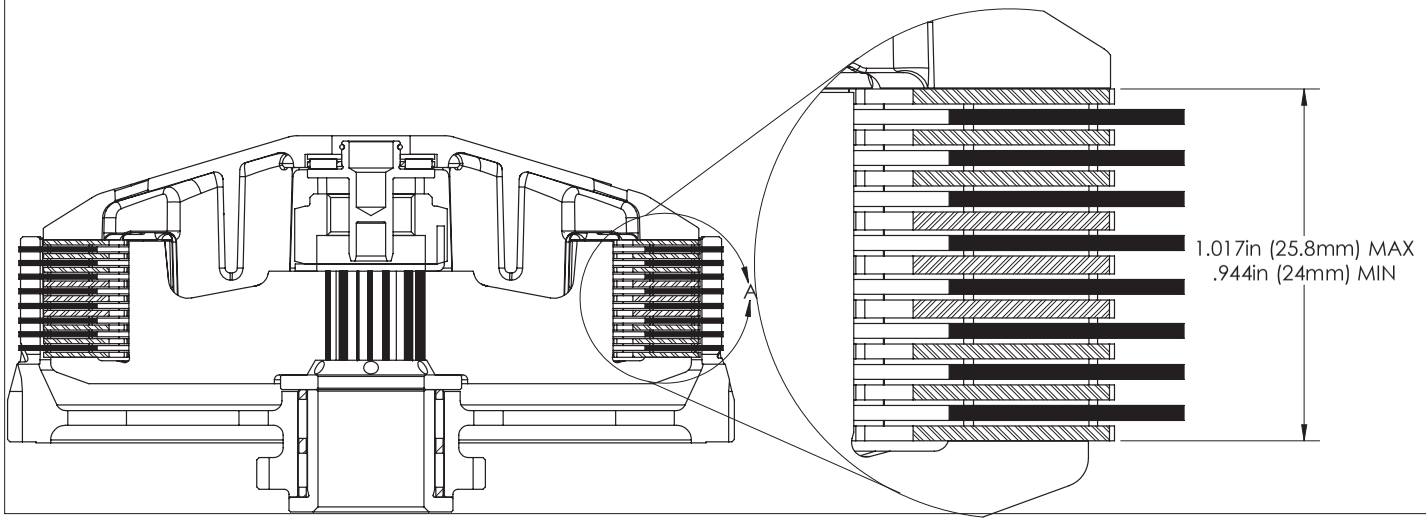

REKLUSE MotorSports
12000 FRANKLIN RD
BOISE, IDAHO 83709
WWW.REKLUSE.COM
PH (208) 426-0859
FAX (208) 672-1318

SETUP SHEET 198-2813092 FOR 350

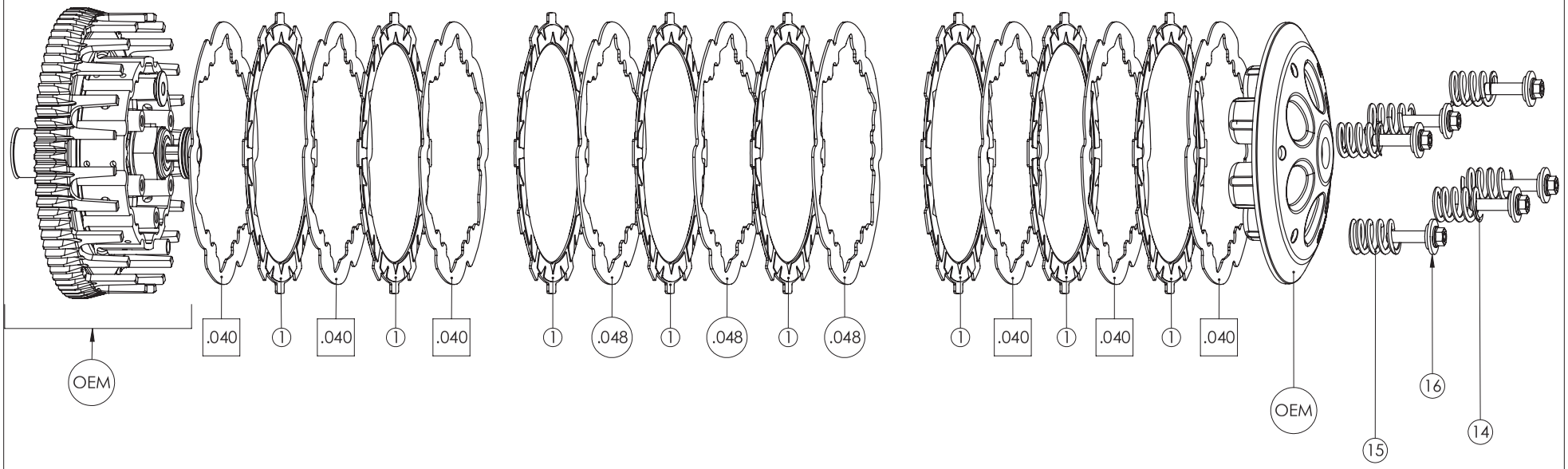

ITEM NO.	DESCRIPTION	QTY.
.040	DRIVE PLATE- .040in (1mm)	6
.048	DRIVE PLATE - .048in (1.2mm)	3
1	TORQDRIVE FRICTION	8
14	REKLUSE PINK SPRING	3
15	REKLUSE ORANGE SPRING	3
16	REKLUSE SPRING POST	6
28	SCREW SLEEVE, KTM CSS	1

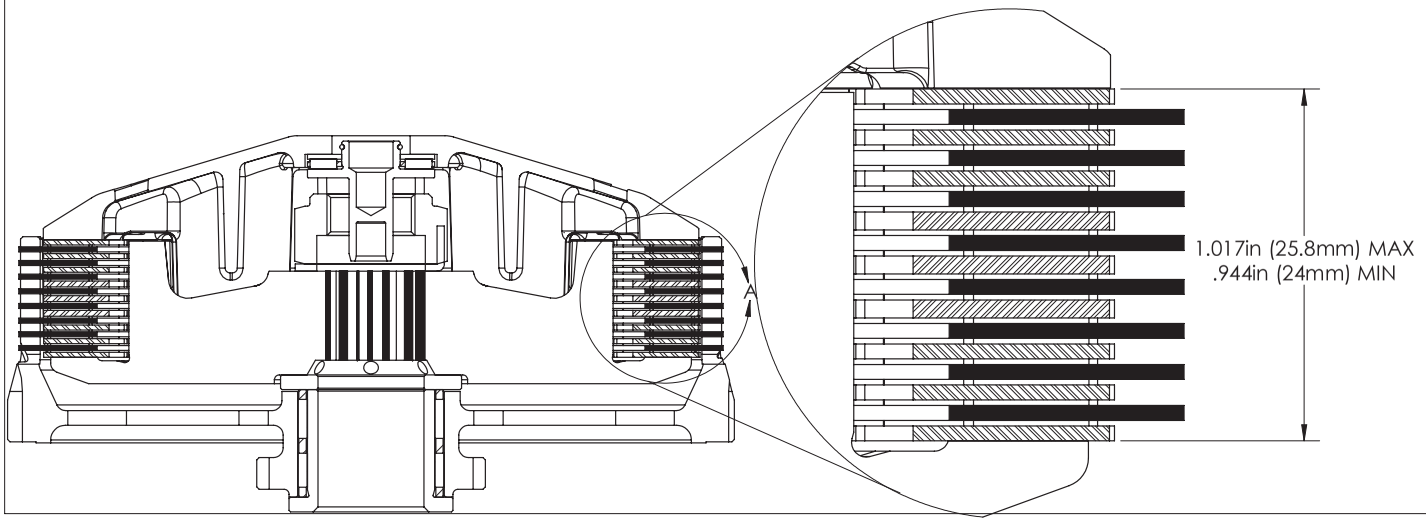

REKLUSE MotorSports
12000 FRANKLIN RD
BOISE, IDAHO 83709
WWW.REKLUSE.COM
PH (208) 426-0859
FAX (208) 672-1318